Wealden Security Systems Ltd

Intruder alarms · CCTV · Access control · Fire alarms · Gates · Monitoring

USER MANUAL

Roger Technology Swing Gate Automation

Use and maintenance manual

Installed, serviced and supported by Wealden Security Systems

Telephone	01892 341464 or 01892 654198
Email	info@wealdensecurity.co.uk
Website	www.wealdensecuritysystems.co.uk
Address	8 Windsor Place, Crowborough, East Sussex TN6 2HU

Gate Safe Aware Installer no. 2464

Company no. 10914278 · Registered in England

This user manual is published by Roger Technology and is supplied by Wealden Security Systems Ltd for our customers' convenience.

USE AND MAINTENANCE MANUAL

Swing gates

Rev.02 30/03/2020

ROGER TECHNOLOGY®

1 ATTENTION: IMPORTANT SAFETY INSTRUCTIONS

IT IS IMPORTANT FOR THE SAFETY OF PERSONS TO OBSERVE THESE INSTRUCTIONS

√ Failure to observe the information given in this manual may result in personal injury or damage to the equipment.

√ These instructions are an integral part of the product and must be handed to the user.

√ Read these instructions carefully, as they provide important information concerning the safety, use and maintenance of the installation.

√ These instructions must be kept and must be made available to any other persons authorised to use the installation.

√ This product may only be used for its expressly intended purpose.

√ Any other usage is inappropriate and dangerous. The manufacturer cannot be held responsible for any damage resulting from inappropriate, erroneous or unreasonable usage.

√ Keep away from hinges and moving parts.

√ Keep out of the area of action of the motorised door or gate while it is moving.

√ Never try to stop the motorised door or gate while it is moving as this may be dangerous.

√ It is forbidden to tamper with the settings setted.

√ The motorised door or gate may be used by children aged 8 and above, by persons with diminished physical, sensory or mental capacity and by persons without the necessary experience and knowledge provided that they are supervised or have received adequate instruction on using the installation safely and to ensure that they understand the dangers involved in its operation.

√ Children must be supervised at all times to ensure that they do not play with the installation and that they keep out of the area of action of the motorised door or gate.

√ Keep remote controls and any other control devices out of the reach of children to prevent the risk of the motorised door or gate being operated unintentionally.

√ Keep feet away from the bottom of the motorized door or gate during their operation.

√ Do not operate the motorized door or gate by remote control unless they are in view.

√ Ensure that a qualified installer periodically carries out maintenance on the motorized door or gate (from 3 to 12 months).

√ In the event of a fault or malfunction of the product, turn the main power switch off and have the installation serviced by a qualified professional. Do not attempt to repair the installation or rectify the problem yourself.

√ Immediately stop using the automatism if faults occur and contact support.

√ In case of doubts about the functioning of your motorized door or gate, contact a qualified installer.

√ Failure to observe these instructions may lead to danger.

ROGER TECHNOLOGY is the exclusive proprietor holder of all rights regarding this publication.
ROGER TECHNOLOGY reserves the right to implement any modifications without prior notification. Copying, scanning or any alterations to this document are prohibited without express prior authorised from by ROGER TECHNOLOGY.

2 Important information for risk analysis

The diagram below shows a typical installation, which details the potential hazards associated with any automated swing gate.

LEGENDA:

	NO PASSING Warning door or gate moving.		**FEET CRUSHING HAZARD** Warning! Danger of crushing feet due to moving mechanical surfaces or parts.
	HAND CRUSHING HAZARD Warning! Danger of crushing hands due to moving mechanical surfaces or parts.		**DANGER OF ELECTRIC SHOCK** Warning! Danger of the presence of electric voltage .
			HAZARDOUS AREA Do not enter the range of action of the motorized door or gate.

3 Responsibility for product

In accordance with European Directives, the owner or user of in the installation is responsible for complying with the following.
To ensure that the installation is kept in proper working order, the automatic gate must be subject to periodical maintenance performed by qualified personnel in accordance with the instructions of the manufacturer.
The automatic system must operate in the original conditions verified during initial testing conducted by the installer and in the presence of the end user.
Do not tamper with the original settings.
In the event of a fault or malfunction of the automatic gate, disconnect the installation from mains electrical power and have the installation serviced by a qualified professional. Do not attempt to repair the installation or rectify the problem yourself.
In the event of any malfunction, stop using the automation system immediately and contact the technical support service.
Failure to observe these instructions may lead to danger.

4 Maintenance

The ROGER TECHNOLOGY automation system for sliding gates requires periodical maintenance to keep it in proper working order and to ensure that it continues to function in complete safety.
Agree upon a periodical maintenance schedule with the installer.
ROGER TECHNOLOGY recommends servicing at 6 month intervals for normal usage. However, the frequency of maintenance intervals may vary depending on intensity of usage.
In particular, all the safety devices must be checked periodically to ensure that they are working correctly.
All installation, maintenance and repair work must be documented correctly, and the relative documents must be made available to the user.

Periodical maintenance by user

- Clean the lenses of the photocells with a soft cloth dampened slightly with water. Do not use solvent or other chemical products, as this may damage the devices.
- Clean the guide rails to remove any leaves or stones which could impede the movements of the automation system.
- Trim any plants encroaching into the area of action of the photocells or which could impede the movements of the automation system.
- Do not direct water onto the parts.

Periodical maintenance by installer

- Disconnect the system from mains electricity and unlock the gate.
- Check all parts for wear and deterioration. In particular, check all structural parts for wear and corrosion. Replace any parts not in an adequate condition to ensure continued correct operation.
- Check the condition and tightness of all fastener screws.
- Clean the guide rails and the rack and pinion of the gear motor.
- Lightly lubricate the rack and pinion of the gear motor. Manually check that the gate slides smoothly and without impediment.
- Lock the gate and reconnect to mains electricity.
- Check that all control devices, safety devices and limit switches function correctly.
- Check the force settings.

5 Unlock instructions

Warning: always disconnect the installation from mains electricity and, if applicable, from the batteries before unlocking and locking the automation system.

BE20 - BR20 - R20 Series

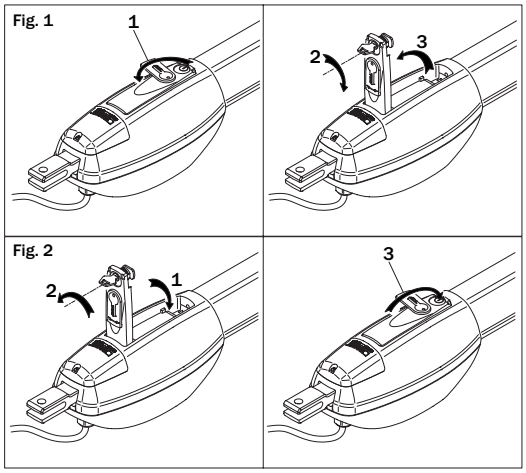

UNLOCKING (fig. 1)
Open the lock cover (ref. 1), insert the key included in the lock and turn clockwise by 90° (ref. 2), then pull the key first and then the lever to open the door (ref. 3) completely. Manoeuvre the gate manually.

LOCKING (fig. 2)
WARNING: operate the lock release lever with caution to avoid the risk of injury to the fingers.
Close the lock release lever. Insert the key included into the lock and turn clockwise by 90°.
Once the lock release lever has returned to its original position, turn the key anticlockwise, remove from the lock and close the lock cover.

BM20 - M20 - H20 - SMARTY Series

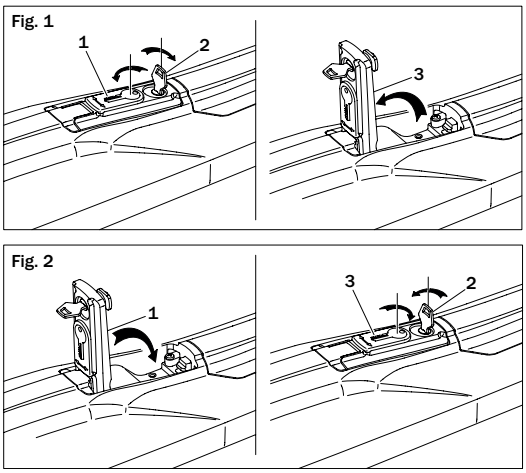

UNLOCKING (fig. 1)
Turn the lock cover (rif. **1**), insert the key included in the lock and turn clockwise by 90° (ref. **2**), then pull the key first and then the lever to open the door (ref. **3**) completely. Manoeuvre the gate manually.

LOCKING (fig. 2)
WARNING: operate the lock release lever with caution to avoid the risk of injury to the fingers.
Close the lock release lever. Insert the key included into the lock and turn clockwise by 90°.
Once the lock release lever has returned to its original position, turn the key anticlockwise, remove from the lock and close the lock cover.

BH23 - H23 Series

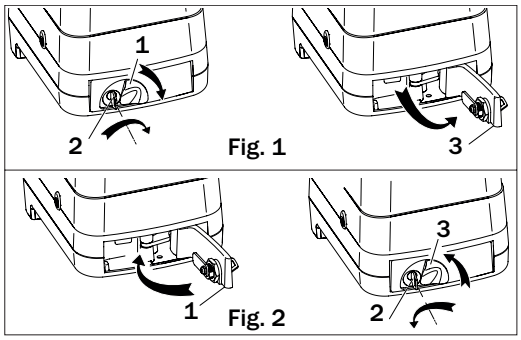

UNLOCKING (fig. 1)
Turn the lock cover (rif. **1**), insert the key included in the lock and turn clockwise by 90° (ref. **2**), then pull the key first and then the lever to open the door (ref. **3**) completely. Manoeuvre the gate manually.

LOCKING (fig. 2)
WARNING: operate the lock release lever with caution to avoid the risk of injury to the fingers.
Close the lock release lever. Insert the key included into the lock and turn clockwise by 90°.
Once the lock release lever has returned to its original position, turn the key anticlockwise, remove from the lock and close the lock cover.

R23 Series

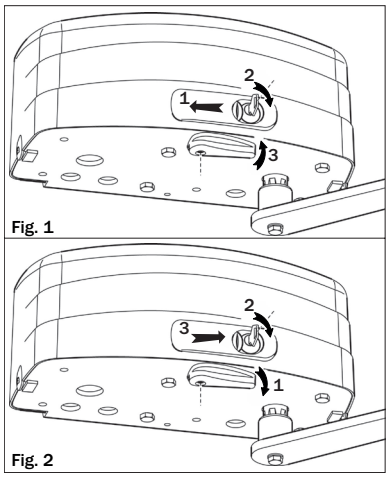

UNLOCKING (fig. 1)
Open the lock cover (ref. **1**), insert the key included in the lock and turn clockwise by 90° (ref. **2**).
Turn the lever by 180°(ref. **3**).
Manoeuvre the gate manually.

LOCKING (fig. 2)
WARNING: operate the lock release lever with caution to avoid the risk of injury to the fingers.
Turn the lock release lever by 180° and return it to its original position. Insert the key and turn anticlockwise, remove from the lock and close the lock cover.

BR21 - R21 Series

UNLOCKING RL650 (fig. 1)
Remove the lock cover (ref. **1**), fit the lock release lever included and turn by approximately 120° towards the centre of the gate (ref. **2**). Manoeuvre the gate manually (ref. **3**).

LOCKING RL650 (fig. 2)
With the gate open, fit the lock release lever and rotate towards the gate hinges to return it to its original position. Fit the lock cover. The release system re-engages automatically when the gate is manoeuvred again.

UNLOCKING RL651
(Fig. 1) Remove the lock cover (ref. **1**), insert the lock release key included and turn by approximately 90° towards the centre of the gate (ref. **2**) without removing the key. Pull the lever to open completely (ref. **3**). Manoeuvre the gate manually (ref. **4**).

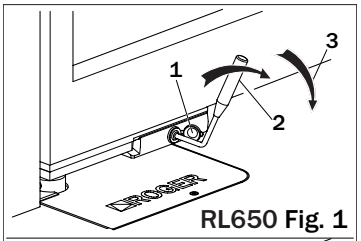

RL650 Fig. 1

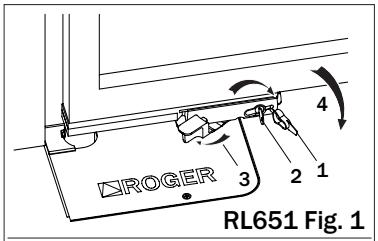

RL651 Fig. 1

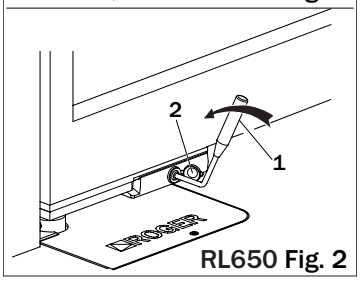

RL650 Fig. 2

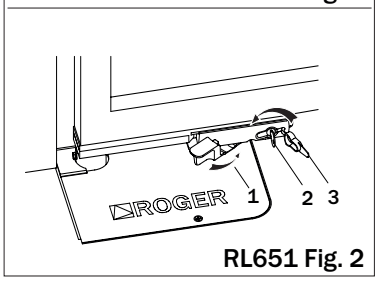

RL651 Fig. 2

LOCKING RL651
(Fig. 2) With the gate open, turn the release lever (ref. **1**) to return it to its original position.
Turn the key by 90° towards the gate hinges (ref. **2**). Fit the lock cover (ref. **3**). The release system re-engages automatically when the gate is manoeuvred again.

H21 Series

UNLOCKING RL750 (fig. 1)
Remove the lock cover (ref. **1**), fit the lock release lever included and turn by approximately 120° towards the centre of the gate (ref. **2**). Manoeuvre the gate manually (ref. **3**).

LOCKING RL750 (fig. 2)
With the gate open, fit the lock release lever and rotate towards the gate hinges to return it to its original position. Fit the lock cover. The release system re-engages automatically when the gate is manoeuvred again.

UNLOCKING RL751
(Fig. 1) Remove the lock cover (ref. **1**), insert the lock release key included and turn by approximately 90° towards the centre of the gate (ref. **2**) without removing the key. Pull the lever to open completely (ref. **3**). Manoeuvre the gate manually (ref. **4**).

LOCKING RL751
(Fig. 2) With the gate open, turn the release lever (ref. **1**) to return it to its original position.
Turn the key by 90° towards the gate hinges (ref. **2**). Fit the lock cover (ref. **3**). The release system re-engages automatically when the gate is manoeuvred again.

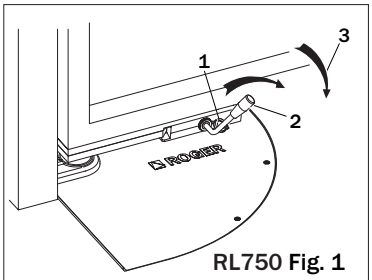

RL750 Fig. 1

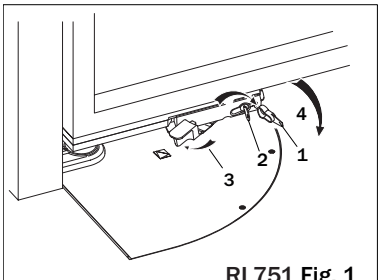

RL751 Fig. 1

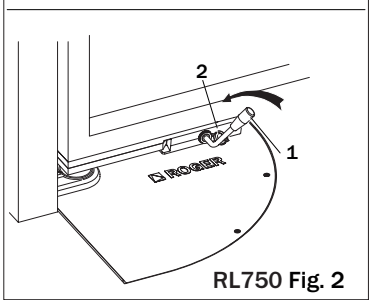

RL750 Fig. 2

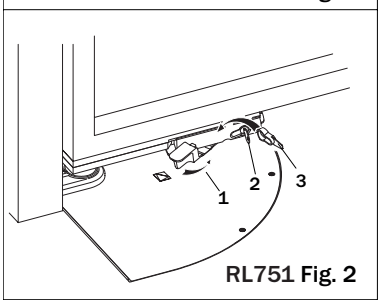

RL751 Fig. 2

6 Environmental requisites

ROGER TECHNOLOGY products consist of electronic components and may also be equipped with batteries containing substances that are harmful to the environment.
Disconnect from mains electricity before removing electronic components and the battery.
Observe local regulations for disposing of used materials and packaging. Disposing correctly of products when no longer in use will contribute to preventing harm to the environment and to human health.
To dispose correctly of electric and electronic devices and batteries, the owner or user must deliver them to specialised differentiated refuse collection centres operated by local authorities.

7 Troubleshooting

Problem	*Possible cause*	*Solution*
Gate does not open and does not close	No power	Check mains power supply
	Gear motor unlocked	Lock the gear motor. See instructions for unlocking.
	Transmitter battery flat	Replace batteries
	Transmitter broken	Contact technical support service
	STOP button stuck or faulty	Contact technical support service
	Open/close buttons or key selector switch stuck	Contact technical support service
Gate opens but does not close	Obstacle detected by photocells	Check if photocell lenses are clean and check operation of photocells
	Sensing edge malfunction	Contact technical support service
Gate closes but does not open	Sensing edge malfunction	Contact technical support service
Flashing light not working	Bulb blown	Replace bulb

8 Installation details

INSTALLER COMPANY

Trading name		
Address (Street No, street etc.)		
PO CODE	City	Country
Telephone no.	E-mail	

INSTALLER

Name	Surname
Mobile	E-mail

CUSTOMER

Name	Surname	
Address (Street No, street etc.)		
PO CODE	City	Country
Telephone no.	E-mail	

INSTALLATION APPLICATION

RESIDENTIAL ☐

CONDOMINIUM ☐

INDUSTRIAL ☐

COMMERCIAL ☐

PARKING ☐

INSTALLATION DETAILS

1. Material:

Iron ☐ Cast Iron ☐ Wrought iron ☐
Steel ☐ Aluminium ☐ Wood ☐
Other ☐ _____

2. Door leaf:

Solid ☐ Slats ☐

3. Dimensions (LxH) _____

4. Weight (kg) _____

5. Structure:

Open position mechanical stops ☐
Close position mechanical stops ☐

PRODUCTS INSTALLED

MOTOR

BRUSHLESS
BE20/200 ☐
BE20/200/HS ☐
BE20/400 ☐

KIT BE20/210 ☐
KIT BE20/410 ☐

R20/300 ☐
R20/302 ☐
R20/500 ☐
R20/502 ☐

KIT R20/310 ☐
KIT R20/510 ☐

BRUSHLESS
BR20/300 ☐
BR20/500 ☐
BR20/400/R ☐
KIT BR20/310 ☐
KIT BR20/510 ☐

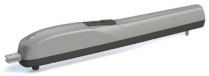

M20/340 ☐

SET M20/342 ☐

BRUSHLESS
BM20/340 ☐

SET BM20/342 ☐

BRUSHLESS
SMARTY4/HS ☐
SMARTY5 ☐
SMARTY5R5 ☐
SMARTY7 ☐
SMARTY7R ☐

H20/370 ☐
H20/550 ☐

CONTROL UNIT

• ROGER ☐

H70/200AC ☐
B70/2DC ☐
EDGE1 ☐

Rev. _____

• OTHER COMPANY ☐

_____
(Specify model)

R21/351 ☐
R21/351SUB ☐
R21/361 ☐
R21/362 ☐
R21/362SUB ☐
R21/368 ☐

SET R21/353 ☐

BRUSHLESS
BR21/351 ☐
BR21/351/HS ☐
BR21/361 ☐
BR21/361/HS ☐
BR21/362 ☐

SET BR21/354 ☐

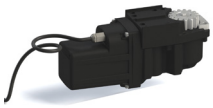

H21/500 ☐

SET H21/510 ☐

H23/282 ☐

SET H23/284 ☐

BRUSHLESS
BH23/282 ☐
BH23/252/HS ☐

SET BH23/284 ☐
SET BH23/254/HS ☐

R23/371 ☐
R23/372 ☐

SET R23/373 ☐

MONOS4/220 ☐

KIT MONOS4/220 ☐

BRUSHLESS
MONOS4 ☐

KIT MONOS4 ☐

RADIO RECEIVERS AND REMOTE CONTROLS

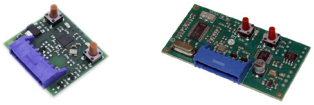

H93/RX22A/I ☐
H93/RX2RC/I ☐
H93/RX20/I ☐

R93/RX12A/I ☐
R93/RX2RC/U ☐
R93/RX20/U ☐

RADIO RECEIVERS

• ROGER ☐
• OTHER COMPANY ☐

_____
(Specify model))

SYNUS/2 ☐

T80/TX2 ☐

E80/TX52R/2 ☐
E80/TX54R/2 ☐

E80/TX2R/RC ☐
E80/TX4R/RC ☐

M80/TX44R ☐

PHOTOCELLS

R90/F2ES ☐
R90/F4ES ☐

G90/F2ES ☐
G90/F2ESI ☐
G90/F4ES ☐
G90/F4ESI ☐

G90/F2ES/TRIX/TX ☐
G90/F2ES/TRIX/RX ☐
G90/F4ES/TRIX/TX ☐
G90/F4ES/TRIX/RX ☐

M90/F2ES ☐
M90/F4ES ☐

M90/F2ESO ☐
M90/F4ESO ☐

T90/F2S ☐
T90/F4S ☐

Number of pairs	1 ☐	2 ☐	3 ☐	4 ☐	_____ ☐

ACCESSORIES

R85/60ES ☐
R85/60EAS ☐
R85/60EAS/TRIX ☐
R85/60EAE ☐
R85/60EAE/TRIX ☐
R85/60IS ☐
R85/60IAS ☐
R85/60IAE ☐

H85/TDS/E ☐
H85/TDS/I ☐
H85/TDS/TRIX ☐
H85/TDR/E ☐
H85/TDR/I ☐
H85/TDR/TRIX ☐

H85/TTD/E ☐
H85/TTD/I ☐
H85/TTD/TRIX ☐

FIFTHY/24 ☐
FIFTHY/230 ☐

R92/LED230 ☐

R91/AN1/LR1 ☐
R91/AN1/P1 ☐

CFT500 ☐
CFT501 ☐

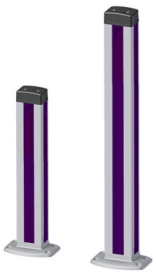

TRIX50 ☐
TRIX100 ☐
TRIX50/G90 ☐
TRIX100/G90 ☐

CRA50 ☐
CRA100 ☐
CRA/BAR ☐

ACCESSORIES

- ROGER ☐
- OTHER COMPANY ☐

(Specify model)

(Specify model)

ACCESSORI SUPPLEMENTARI

TABLE OF TAG DATA

Enter the motor tag data in the table below. The data are indicated inside the release hatch (see figure)

TAG DATA

1 P.CODE		2 V.	
3 BATCH		4 IN	
5 PM			

MECHANICAL

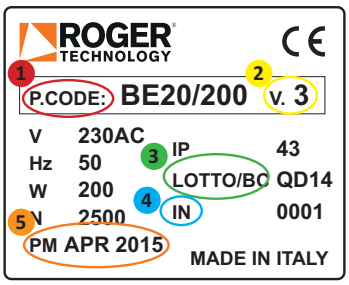

ELECTROMECHANICAL

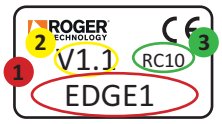

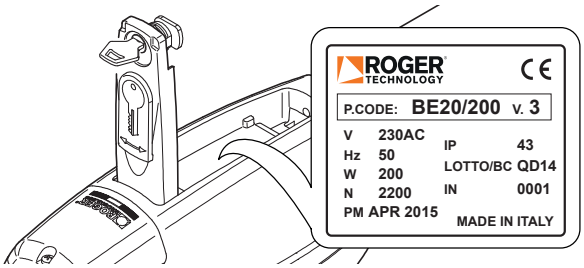

Installation date _____

Use and maintenance manual handed to client: (place and date) _____

Installer signature:	_____	Customer signature:	_____

Initial test report

CUSTOMER COPY

Installer details

Document No: _____

Product description: _____

_____

B.code: _____

CUSTOMER			
Name		Surname	
Address of installation (Street, Square, ...)			
PO CODE	City		Country
Telephone no.		E-mail	

THE ABOVE PRODUCT HAS SUCCESSFULLY PASSED INITIAL TESTING

PRELIMINARY CHECKS

☐	Product complete and undamaged
☐	In-built safety devices undamaged
☐	No visible defects

CHECK AFTER ASSEMBLY

☐	All components assembled correctly
☐	All signage in place (gate warning sign)
☐	Mechanical protective devices
☐	Electrical hazard warning signs
☐	Mechanical hazard warning signs
☐	Residual risk warning signs

FUNCTIONAL TESTS

☐	Test opening and closing of system unconnected to gate
☐	Start and stop devices
☐	Emergency stop devices
☐	Safety devices
☐	Adjustments and settings

PERFORMANCE TESTS

☐	Performance as indicated
☐	Noise when operating within acceptable limits
☐	No hazardous emissions
☐	No damage found after testing

Note:

- The passing of the above mentioned tests allows the product to be considered suitable for use; it is also the formal act of final delivery of the product in its place of installation and use.
- The CE plate applied to the motorized door or gate must be similar to the one shown below.
- The technician installer fully confirms the measurements and details of all the functional checks and tests indicated above.
- By signing this report, the customer:
  - Confirms that the functional characteristics of the product fulfil their required specifications and accepts delivery of the product itself;
  - declares that they have received the use and maintenance instructions for this product, that they have read the instructions and that they will make the instructions available to any person authorised to use the product. Declares that they have been informed of all legislative requirements regarding the usage of the product.
  - undertakes to ensure that the product is used correctly and will be maintained adequately and kept in proper working order as indicated in the use and maintenance instructions;
  - declares that they have received the EC Declaration of Conformity (in compliance with Annexe IIA of EC Directive 98/37/EC).

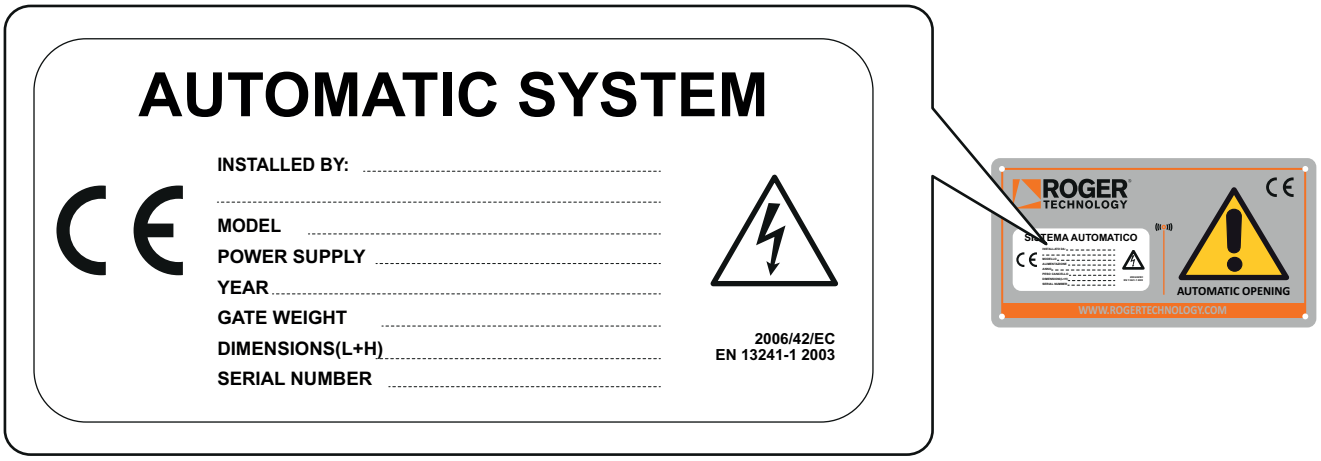

(*) INDICATE IN THE TARGET HERE ABOVE THE DATA RELATING TO THE SWING GATE REQUIRED.

Place and data			
Installer signature		Customer signature	

Initial test report

INSTALLER COPY

Installer details

Document No: _____

Product description: _____

_____

B.code: _____

CUSTOMER			
Name		Surname	
Address of installation (Street, Square, ...)			
PO CODE	City		Country
Telephone no.		E-mail	

THE ABOVE PRODUCT HAS SUCCESSFULLY PASSED INITIAL TESTING

PRELIMINARY CHECKS

☐	Product complete and undamaged
☐	In-built safety devices undamaged
☐	No visible defects

CHECK AFTER ASSEMBLY

☐	All components assembled correctly
☐	All signage in place (gate warning sign)
☐	Mechanical protective devices
☐	Electrical hazard warning signs
☐	Mechanical hazard warning signs
☐	Residual risk warning signs

FUNCTIONAL TESTS

☐	Test opening and closing of system unconnected to gate
☐	Start and stop devices
☐	Emergency stop devices
☐	Safety devices
☐	Adjustments and settings

PERFORMANCE TESTS

☐	Performance as indicated
☐	Noise when operating within acceptable limits
☐	No hazardous emissions
☐	No damage found after testing

Note:

- The passing of the above mentioned tests allows the product to be considered suitable for use; it is also the formal act of final delivery of the product in its place of installation and use.
- The CE plate applied to the motorized door or gate must be similar to the one shown below.
- The technician installer fully confirms the measurements and details of all the functional checks and tests indicated above.
- By signing this report, the customer:
  - Confirms that the functional characteristics of the product fulfil their required specifications and accepts delivery of the product itself;
  - declares that they have received the use and maintenance instructions for this product, that they have read the instructions and that they will make the instructions available to any person authorised to use the product. Declares that they have been informed of all legislative requirements regarding the usage of the product.
  - undertakes to ensure that the product is used correctly and will be maintained adequately and kept in proper working order as indicated in the use and maintenance instructions;
  - declares that they have received the EC Declaration of Conformity (in compliance with Annexe IIA of EC Directive 98/37/EC).

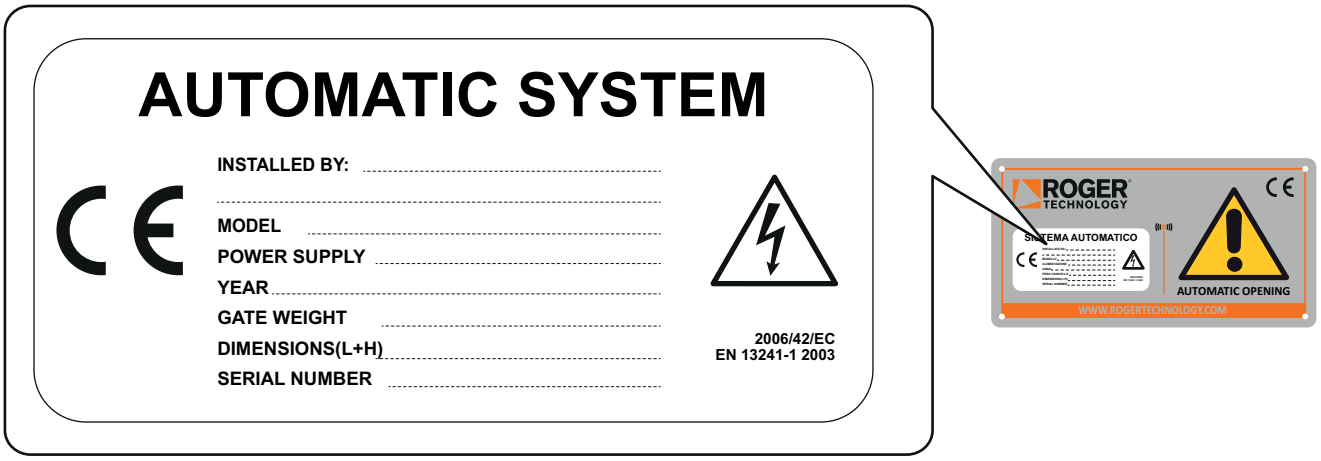

(*) INDICATE IN THE TARGET HERE ABOVE THE DATA RELATING TO THE SWING GATE REQUIRED.

Place and data			
Installer signature		Customer signature	

9 Maintenance log

Corrective action 1

Trading name and address (or stamp) of maintenance company

Date of work: _____

Description of work:

_____

_____

_____

_____

_____

Replacement SI ☐ NO ☐

Reason for replacement:

_____

_____

_____

Material replaced:

_____

_____

_____

_____

Date:	Technician signature:	Client signature:
_____	_____	_____

Signature for acceptance

ROGER TECHNOLOGY

Corrective action 2

Trading name and address (or stamp) of maintenance company

Date of work: _____

Description of work:

_____

_____

_____

_____

_____

Replacement SI ☐ NO ☐

Reason for replacement:

_____

_____

_____

Material replaced:

_____

_____

_____

_____

Date:	Technician signature:	Client signature:

Signature for acceptance

Corrective action 3

Trading name and address (or stamp) of maintenance company

Date of work: _____

Description of work:

_____

_____

_____

_____

_____

Replacement SI ☐ NO ☐

Reason for replacement:

_____

_____

_____

Material replaced:

_____

_____

_____

_____

Date:	Technician signature:	Client signature:
_____	_____	_____

Signature for acceptance

ROGER TECHNOLOGY

Corrective action 4

Trading name and address (or stamp) of maintenance company

Date of work: _____

Description of work:

_____

_____

_____

_____

_____

Replacement YES ☐ NO ☐

Reason for replacement:

_____

_____

_____

Material replaced:

_____

_____

_____

_____

Date:	Technician signature:	Client signature:

Signature for acceptance

Corrective action 5

Trading name and address (or stamp) of maintenance company

Date of work: _____

Description of work:

_____

_____

_____

_____

_____

Replacement YES ☐ NO ☐

Reason for replacement:

_____

_____

_____

Material replaced:

_____

_____

_____

_____

Date:	Technician signature:	Client signature:
_____	_____	_____

Signature for acceptance

ROGER TECHNOLOGY

10 Monthly maintenance checks

To avoid problems it is important to perform simple maintenance checks on your automation on a monthly basis.
Some basic information on the maintenance of your automation are indicated in chapter 4 of this USER MANUAL.
Below you will find a summary table to record your checks.

YEAR :	G	F	M	A	M	G	L	A	S	O	N	D
Verify that the photocells operate correctly during the opening operation.												
Verify that the photocells operate correctly during the closing operation.												
Clean the photocells												
Eliminate any vegetation in the range of the photocells or that could hinder automation.												
Release the motorized door or gate.												
Lubricate the pins / hinges and other moving parts												
Check the functioning of sensitive edges												

YEAR :	G	F	M	A	M	G	L	A	S	O	N	D
Verify that the photocells operate correctly during the opening operation.												
Verify that the photocells operate correctly during the closing operation.												
Clean the photocells												
Eliminate any vegetation in the range of the photocells or that could hinder automation.												
Release the motorized door or gate.												
Lubricate the pins / hinges and other moving parts												
Check the functioning of sensitive edges												

YEAR :	G	F	M	A	M	G	L	A	S	O	N	D
Verify that the photocells operate correctly during the opening operation.												
Verify that the photocells operate correctly during the closing operation.												
Clean the photocells												
Eliminate any vegetation in the range of the photocells or that could hinder automation.												
Release the motorized door or gate.												
Lubricate the pins / hinges and other moving parts												
Check the functioning of sensitive edges												

YEAR :	G	F	M	A	M	G	L	A	S	O	N	D
Verify that the photocells operate correctly during the opening operation.												
Verify that the photocells operate correctly during the closing operation.												
Clean the photocells												
Eliminate any vegetation in the range of the photocells or that could hinder automation.												
Release the motorized door or gate.												
Lubricate the pins / hinges and other moving parts												
Check the functioning of sensitive edges												

11 Force test measurements

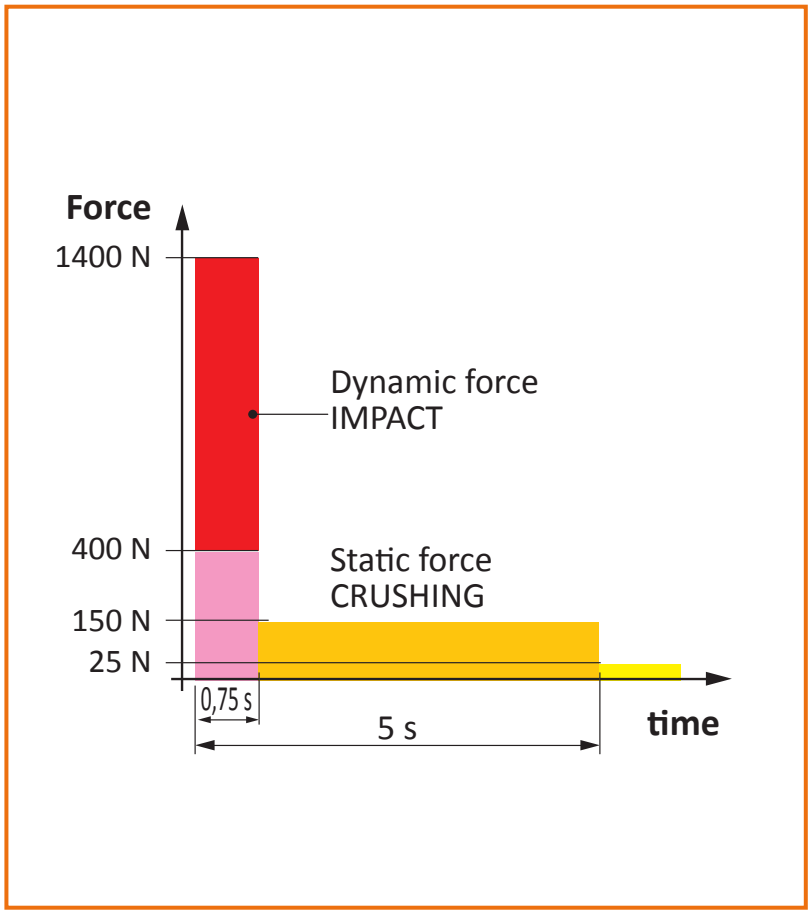

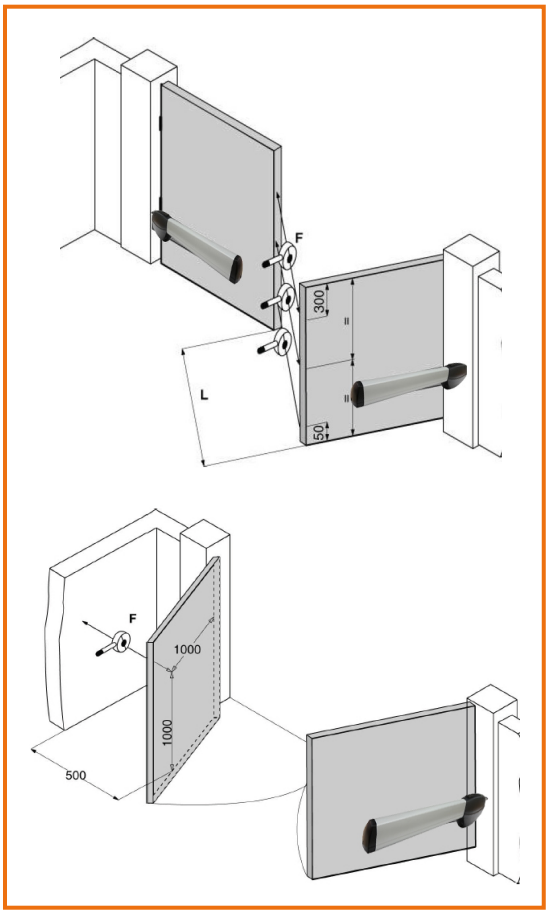

The force measurement data sheet is an important document for certification in compliance with the EC Directive. It is important that the forces exerted by the automatic gate are within the permitted values.

To perform this test, a calibrated and compliant force test instrument must be used. The attached sheet allows you to analyze the passage space, together with the tables on which to record the test results.
We have also provided guidance on positions in which to measure forces. Each test should be repeated at least 3 times to obtain an average result.

The number of positions to be measured varies according to the situation. Measurements must be made at each point where the gate could have a crush point.

On a sliding gate the forces must be measured on the closing edge and on the opening edge, and on all those points where the gate could represent a crushing or entrapment hazard.

We have provided about 13 tables in which to record the measured data, in any case, it may not be necessary to use each table.
It is important that the installer decide how many tests are necessary for each installation.

12 Force measurement technical sheet

System: .....

Date of test: .....

Date of measurement : .....

Serial number: .....

Date of the last calibration: .....

POINT #1 TEST RESULT: POSITIVE ☐ FAILED ☐

TEST	Fd (N)	Td (s)	Fs (N)	Fe (N)
1				
2				
3				
MEDIA				

POINT #1 TEST RESULT: POSITIVE ☐ FAILED ☐

TEST	Fd (N)	Td (s)	Fs (N)	Fe (N)
1				
2				
3				
MEDIA				

POINT #1 TEST RESULT: POSITIVE ☐ FAILED ☐

TEST	Fd (N)	Td (s)	Fs (N)	Fe (N)
1				
2				
3				
MEDIA				

POINT #1 TEST RESULT: POSITIVE ☐ FAILED ☐

TEST	Fd (N)	Td (s)	Fs (N)	Fe (N)
1				
2				
3				
MEDIA				

POINT #1 TEST RESULT: POSITIVE ☐ FAILED ☐

TEST	Fd (N)	Td (s)	Fs (N)	Fe (N)
1				
2				
3				
MEDIA				

POINT #1 TEST RESULT: POSITIVE ☐ FAILED ☐

TEST	Fd (N)	Td (s)	Fs (N)	Fe (N)
1				
2				
3				
MEDIA				

POINT #1 TEST RESULT: POSITIVE ☐ FAILED ☐

TEST	Fd (N)	Td (s)	Fs (N)	Fe (N)
1				
2				
3				
MEDIA				

POINT #1 TEST RESULT: POSITIVE ☐ FAILED ☐

TEST	Fd (N)	Td (s)	Fs (N)	Fe (N)
1				
2				
3				
MEDIA				

POINT #1 TEST RESULT: POSITIVE ☐ FAILED ☐

TEST	Fd (N)	Td (s)	Fs (N)	Fe (N)
1				
2				
3				
MEDIA				

POINT #1 TEST RESULT: POSITIVE ☐ FAILED ☐

TEST	Fd (N)	Td (s)	Fs (N)	Fe (N)
1				
2				
3				
MEDIA				

POINT #1 TEST RESULT: POSITIVE ☐ FAILED ☐

TEST	Fd (N)	Td (s)	Fs (N)	Fe (N)
1				
2				
3				
MEDIA				

POINT #1 TEST RESULT: POSITIVE ☐ FAILED ☐

TEST	Fd (N)	Td (s)	Fs (N)	Fe (N)
1				
2				
3				
MEDIA				

13 EC Declaration of Conformity (according to Annex II A of the Machinery Directive 2006/42 / EC)

The legal representative of the company:

Company name			
Legal address			
Fiscal Code or VAT number:			
Telephone:		e-mail address	
Name and address of the person authorized to set up the technical file:			

Declare under his own responsibility that the product / s named:

Objective description:		Batch and serial number	
Plant location			
Reference name:			
Telephone:		e-mail address	

complies with the national Standard that transpose the following Community Directives: (Where specifically applicable)

- Machinery Directive 2006/42/CE
- Low Voltage Directive 2014/35/EU
- Electromechanical Compatibility Directive 2014/30/EU
- RTT&E Directive 2014/53/EU

The products included in this declaration are installed in compliance with the applicable parts of the following standards:

- EN 13241-1 Industrial, commercial and garage doors and gates. Product standards.
- EN 12453 Industrial, commercial and garage doors and gates. Safety in use of motorized doors - Requirements
- EN 12445 Industrial, commercial and garage doors and gates. Safety in use of motorized doors - Test methods.

The validity refers to what was done and used by the declarant, for the construction and operation of the above mentioned product.
The validity lapses in the cases defined by the following points:

1. Changes are made to the product, not authorized by the declarant;
2. The maintenance obligations set by the Declarant are expected, related to the maintenance of adequate safety standards and good functioning, required by law.
3. In case of improper use of the product.

The legal representative:

Name:	
Role:	Signature:

Technical documentation attached File no.	Date of this declaration:

WWW.ROGERTECHNOLOGY.COM

WELCOME TO OUR B2B CUSTOMER AREA

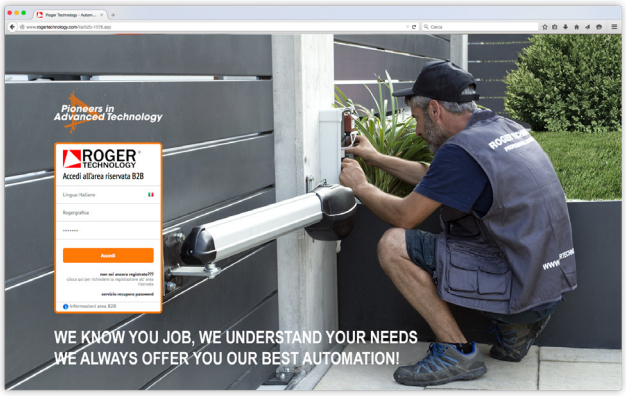

To register or log in to our online customer service:
WWW.ROGERTECHNOLOGY.COM/B2B

ROGER TECHNOLOGY is the exclusive proprietor holder of all rights regarding this publication.
ROGER TECHNOLOGY reserves the right to implement any modifications without prior notification. Copying, scanning or any alterations to this document are prohibited without express prior authorised from by ROGER TECHNOLOGY.

ROGER TECHNOLOGY
Via S. Botticelli 8 • 31021 Bonisiolo di Mogliano Veneto (TV) • ITALIA
P.IVA 01612340263 • Tel. +39 041.5937023 • Fax. +39 041.5937024
info@rogertechnology.com • www.rogertechnology.com

Need a hand with your system?

If anything in this manual doesn't match your system, you've forgotten a code, or something isn't working as it should, just give us a call – we're always happy to help.

01892 341464 · 01892 654198

info@wealdensecurity.co.uk
www.wealdensecuritysystems.co.uk

We also offer

Annual servicing and maintenance
Repairs, upgrades and system takeovers
24/7 alarm monitoring with keyholder and fire brigade call-out
Free, no-obligation surveys and quotations