Wealden Security Systems Ltd

Intruder alarms · CCTV · Access control · Fire alarms · Gates · Monitoring

USER MANUAL

Texecom Premier Elite Alarm System

Master user guide

Installed, serviced and supported by Wealden Security Systems

Telephone	01892 341464 or 01892 654198
Email	info@wealdensecurity.co.uk
Website	www.wealdensecuritysystems.co.uk
Address	8 Windsor Place, Crowborough, East Sussex TN6 2HU

Gate Safe Aware Installer no. 2464

Company no. 10914278 · Registered in England

This user manual is published by Texecom Ltd and is supplied by Wealden Security Systems Ltd for our customers' convenience.

Master User Guide

Premier Elite Series

INS177-9

Texecom

Contents

1. Overview 5

Introduction 5

Keypads 7

Emergency Keys 8

The Quick Arm Keys 9

Keypad Lock 9

Alert, Reset and Service Messages 10

System Alerts 10

Fault Messages 11

Zone Faults During Arming 12

Other Messages Displayed during Arming 12

2. Using the Alarm System 13

Introduction 13

The Arming Menu 14

3. Operating the Alarm System 15

Introduction 15

To FULL Arm the System 16

To arm the system, proceed as follows: 16

To PART Arm the System 17

To part arm the system, proceed as follows: 17

To ARM Individual Areas 18

To select areas for full arming, proceed as follows: 18

To DISARM the System 19

During Entry 19

When Not in Entry 19

To CANCEL the Exit Mode 19

To cancel the exit mode, proceed as follows: 19

To CLEAR an Arm Fail 20

To clear the arm fail, proceed as follows: 20

To SILENCE an Alarm 20

To silence an alarm, proceed as follows: 20

To DISPLAY the cause(s) of System Alerts (Alarms) 21

To RESET After an Alarm 21

USER Reset 21

To reset the alarm, proceed as follows: 21

ENGINEER Reset 21

ANTI-CODE Reset 22

To reset the alarm, proceed as follows: 22

To OMIT Zones 23

To omit zones when arming, proceed as follows: 23

To Turn CHIME On and Off **24**
To turn CHIME On proceed as follows: 24
To turn CHIME Off proceed as follows: 24
To VIEW the Status of Zones **25**
To view the status of zones, proceed as follows: 25
To OMIT 24 Hour Zones **26**
To omit 24 Hour zones, proceed as follows: 26
To SELECT Areas for Chime **27**
To select an area for Chime, proceed as follows: 27
To VIEW Activity Faults **28**
To view activity faults, proceed as follows: 28
To VIEW Activity Counts **29**
To view activity counts, proceed as follows: 29
To DEFER Arming **30**
To defer arming BEFORE arming starts: 30
To defer WHEN arming starts: 30
Sending a Text Message to a Mobile Phone **31**
To send a Text Message, proceed as follows: 31

4. Programming the Alarm System **32**
Introduction **32**
Viewing the Event Log **33**
To view the Event Log, proceed as follows: 33
Event Log Descriptions 34
Changing Your User Code **36**
To change your User code, proceed as follows: 36
Setting up Zones for Chime **37**
To setup zones for Chime, proceed as follows: 37
Testing the Sounders and Strobe **38**
To test the Sounders and Strobe, proceed as follows: 38
Walk Testing the System **39**
To perform a walk test, proceed as follows: 39
Enabling Engineer Access **40**
To enable Engineer access, proceed as follows: 40
Setting the System Time **41**
To set the System Time, proceed as follows: 41
Setting the System Date **42**
To set the System Date, proceed as follows: 42
Overriding the Control Timers **43**
To turn the control timers on & off, proceed as follows: 43
Altering the Control Timers **44**
To program control timers, proceed as follows: 44
Adding New Users to the System **45**
Programming New Users 45
User Types 46

Available Options 47
User Options 1 48
User Options 2 49
User Config. 50
User Name Text 51
Programming Users 52
To Program Users, proceed as follows: 52
Deleting Users 54
To delete User codes proceed as follows: 54
Setting up the Part Arms 55
To set up the Part Arms, proceed as follows: 55
Calling a Remote PC 56
To send a call to a Remote PC, proceed as follows: 56
Altering the Holiday Dates 57
To alter Holiday Dates, proceed as follows: 57
Adjusting Speaker Volumes 58
To adjust speaker volumes, proceed as follows: 58
Printing the Event Log 59
To print the Event Log, proceed as follows: 59
Editing a Mobile Telephone Number 60
To edit a Phone Number, proceed as follows: 60
Changing Ricochet Device Batteries 61
To replace batteries, proceed as follows: 61
View Unique Id (GUiD) 61
Enable Texecom Connect App 62
Reset Recipe Data 63
To reset Recipe Data 63
5. Specifications 64
European Standards 64
Inhibit Functions 64
Minimum Logical Keys 64
Warranty 64
6. Installation Records 65

1. Overview

Introduction

The alarm system consists of a control panel, one or more keypads and various detectors and sensors. The control panel is normally mounted out of sight in a cupboard etc. and houses the system's electronics and stand-by battery. There is normally no reason for anyone except an installer or service person to have access to the control panel.

The keypad is used to control the alarm system and to display its status via the English text display. The keypad also provides audible feedback each time a key is pressed. Each keypad will be mounted in a convenient location inside the protected premises, near the designated points of entry/exit.

Users

Users of the alarm system will be assigned a unique 4, 5 or 6 digit User code. User codes are used to arm and disarm areas to which they are assigned. Some User codes can also access additional options such as, system tests and omitting zones.

To access the system a valid User code must be entered, if a mistake is made whilst entering a User code, simply re-enter the correct code (the system may have been programmed so that too many incorrect code entries will cause a Tamper alarm or lock the keypad out).

The User code may not allow access to certain functions i.e. if the code is only allowed to arm and disarm area A, it will not be able to arm or disarm other areas on the system.

Most User codes can arm and disarm areas assigned to them from any keypad on the system. However, Local Users will only be able to arm and disarm areas assigned to them, from keypads assigned to the same areas.

As well as or instead of a code, users of the alarm system can be assigned a Proximity TAG. Proximity TAGS replace the code number being entered with a key ring type TAG that is presented to the reader inside the keypad to operate the alarm system.

Zones

A 'zone' is part of the protected premises and may consist of one or more detection devices protecting rooms and points of entry/exit, (e.g. front door, kitchen, downstairs windows, upstairs bedrooms, etc.). When the alarm system is fully armed, all of the zones on the system are monitored.

Some zones may belong to more than one area, such as points of entry/exit i.e. the front door and movement sensor in an entrance lobby. These are called **global zones** because they are assigned to multiple areas.

A zone that is assigned to more than one area will only be monitored when all of the areas it is assigned to are armed.

Areas

An ‘area’ is a group of one or more zones and would normally be used to split the premises into different sections. Each area can be either ‘Full’ armed or ‘Part’ armed.

Example 1: Domestic Premises
The entire house could be area A.

Each area can be ‘Part’ armed. For instance, detection devices upstairs, i.e. PIR’s, could be programmed so that they will not be monitored during a ‘Part’ arm, allowing access to the upstairs of the house at night.

NOTE *Area A forms the entire alarm system.*

Example 2: Domestic Premises
The upstairs of a house could be area A, the downstairs could be area B and the garage could be area C.

Each area can be ‘Full’ armed independently from each other (all detection devices in the area monitored). For instance, downstairs and the garage in example 1 (areas B & C) could be armed at night allowing access to the upstairs of the house (area A).

NOTE *All of the areas together form the entire alarm system.*

Example 3: Commercial Premises
Office 1 in an office block could be area A, office 2 could be area B and office 3 could be area C.

Each area can be armed and disarmed independently from each other. For instance, any of the offices in example 2 above could be armed and disarmed to allow access without affecting the other offices.

NOTE *All of the areas together form the entire alarm system.*

Example 4: Office Block
The foyer of the office block in example 4 would need to be armed when the last office is armed and disarmed when the first office is disarmed.

Because the foyer is a global area (used by everyone) the zones in that area need to be assigned to areas A, B and C. This ensures that the zone is only recognised by the system when ALL areas (A, B & C) are armed, allowing access to the foyer even if one of the areas is still armed.

Monitoring

This alarm system is capable of reporting Intruder alarms, Panic alarms, Fire alarms and other types of information over telephone lines to an Alarm Receiving Centre. If you accidentally set the alarm off, call the Alarm Receiving Centre immediately to prevent an unnecessary response.

NOTE *The monitoring function must be enabled before it will work.*

Keypads

One or more keypads will be installed throughout the protected premises, usually one at each entry/exit door. The keypads are used to perform all of the system functions i.e. Arming, Disarming etc.

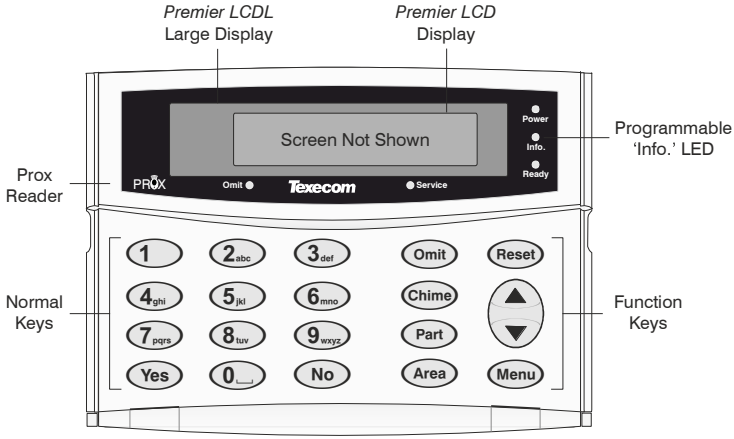

Display Window *(Premier LCD/LCDP & LCDL/LCDLP & Premier Elite LCDLP/FMK/SMK)*
The 32-Character LCD display is used to show the status of the system and to view system data.

Proximity Reader *(Premier LCDP & LCDLP Premier Elite LCDLP/FMK/SMK)*
Built in Proximity Reader for use with Proximity TAGS (approximate range is between 1 and 5 cm). Proximity TAGS can be used as an alternative to a Code number.

LED Indicators
Five LED indicators have been provided to indicate the status of the system.

LED	Status	Meaning
Power	On	AC mains is present on the control panel
	Flashing	AC Mains is not present, the control panel is running on the standby battery
Service	On	The system requires attention, contact your installer
	Off	The system does NOT require attention
Ready	On	All zones are secure and the system is ready to be armed
	Off	One or more zones are active
	Flashing	The system has zones (with the 'Force Omit' attribute) that are active
Info.	On	The system is armed (can also be programmed for other indications)
	Off	The system is unarmed (can also be programmed for other indications)
Omit	On	One or more zones are omitted
	Off	No zones are omitted

Keys

Keys 1 to 9
These keys are for entering User codes or programming data.

Yes & No Keys ✓/Yes & ✗/No
The YES key is used to accept actions and the NO key is to cancel actions or edit data.

Omit Key /Omit
This key is used to omit zones (see page 23 for details).

Chime Key /Chime
This key is used for turning the chime facility on and off (see page 24 for details) and also for turning the Exit tones on and off during the exit mode.

Part Key /Part
This key is used to part arm the system (see page 17 for details). It can also be used to do a 'Quick' part arm if this feature is enabled.

Area Key /Area
This key is used to arm or disarm particular areas (see page 18 for details). It can also be used to do a 'Quick' arm if this feature is enabled.

Reset Key /Reset
This key is used to exit from a menu or to reset the system (see page 21 for details).

Scroll Key
This key is used to scroll through the various menus and options and also to slow down the display if it is scrolling through alarm information too fast.

Menu Key /Menu
This key is used to select the Arming or User menu.

Emergency Keys

In case of emergency, the alarm system can provide three immediate emergency alarms by pressing and holding two specific keys.

Press Keys	UK Response	Export Response
1 & 3	Panic Alarm (PA)	Fire
4 & 6	Fire	Panic Alarm (PA)
7 & 9	Medical	Medical

NOTE

The emergency keys can be enabled/disabled for each keypad on the system.

The Panic alarm can be programmed for either audible or silent operation.

The Panic alarm can be programmed for either instant or delayed operation.

The Quick Arm Keys

The 'Quick Arm' keys allow the system to be armed without having to enter a User code first.

NOTE *The 'Quick Arm' keys will only work if the keypad has been programmed to allow arming in this way.*

To FULL arm the system, press / Area.

To PART arm the system, press 1, 2 or 3 followed by / Part.

Keypad Lock

The keys on the keypad can be locked to prevent unwanted access to the system.

NOTE *The Emergency keys will NOT operate with the keys locked.*

To Lock the keys, press ✓/Yes and ✗/No together.

To Unlock the keys, press ✓/Yes and ✗/No together again.

Keys

ICONS		UK English		English
	=	Omit	=	Bypass
	=	Chime	=	Chime
	=	Part	=	Stay
	=	Area	=	Area
	=	Reset	=	Reset
	=	Menu	=	Menu
✓	=	Yes	=	Yes
OK	=	Yes	=	Yes
✗	=	No	=	No

LED's

	=	Power		✓	=	Ready
	=	Armed/Info		OK	=	Ready
	=	Omit			=	Service

Alert, Reset and Service Messages

System Alerts

When an alarm or fault condition exists on the system the keypad will display a warning message.

```
SYSTEM ALERTS!
Tue 06 Mar 2005
```

In order to display the alarm or fault condition(s) that generate this alert, enter your user code, a scrolling display will show all alarm/fault conditions on the system.

When alarm information is being displayed, pressing the SCROLL key will slow down the display and also allow manual scrolling through the events.

The messages that can be displayed are shown in ***Reset and Service messages*** below and in ***Fault Messages*** on page 11.

Reset and Service messages

When the system requires a reset/service the display will show one of three messages. These messages can also be accessed at any time from the normal display.

NOTE *These messages may have been changed by the installer and may contain the telephone numbers of the installer or the Alarm Receiving Centre.*

To display the reset/service messages, proceed as follows:

Press (Menu) followed by (1) to view the Service message

```
Call Alarm Co
for Service
```

Press (Menu) followed by (2) to view the Reset message

```
Call Engineer to
  Reset System
```

Press (Menu) followed by (3) to view the Anti-code message

```
Call ARC
Reset System
```

Press (Reset) to exit from the messages

The display will return to normal.

Fault Messages

Mains Power Off Tue 06 Mar 2001	There is a Mains failure (the keypad may chime every minute, enter a valid User code or press ⟲/Reset to stop the chime). The display will automatically clear when mains is reapplied.
ATS Path Fault Tue 06 Mar 2001	There is a signal path fault (the keypad may chime every minute, enter a valid User code or press ⟲/Reset to stop the chime). The display will automatically clear when line fault clears. The signal path may be telephone line or mobile phone network.
Battery Fault Tue 06 Mar 2001	There is a fault with the standby battery (the keypad may chime every minute, enter a valid User code or press ⟲/Reset to stop the chime). Contact your alarm company immediately.
???????? Tamper Tue 06 Mar 2001	There is a Tamper fault (the alarm will sound, enter a valid User code to silence the alarm, this fault cannot normally be cleared). Contact your alarm company immediately.
Service Required Tue 06 Mar 2001	The service timer has expired indicating that the system requires a service or a fault has occurred that requires attention (the system can normally still be used). Contact your alarm company to advise.
* Area Secured * Tue 06 Mar 2001	The keypad has been disabled to prevent unauthorised access. This normally occurs when a zone programmed as 'Security Key' is active, the display will automatically clear when the zone returns to normal.
Activity Fault Tue 06 Mar 2001	A zone with the 'Activity' attribute has not been activated within the activity time period, this may be caused by an obstruction (view the zone status to find out which zone has not activated then activate the zone to clear the fault).
???? Fuse Blown Tue 06 Mar 2001	A fuse has blown (the alarm will sound, enter a valid User code to silence the alarm, this fault cannot be cleared). Contact your alarm company immediately.
Area Failed Test Tue 06 Mar 2001	Zones that have been placed on test by the engineer have failed the test (the system can still be used). Contact your alarm company to advise.
Remote Keypad is now LOCKED out	Too many invalid code attempts have caused the keypad to lock out. The keypad will normally remain like this for 5 minutes.
Time Arming > A.....	Areas are being armed using one of the control timers (enter a valid User code to defer the arming).
Alarm Engineer Working On Site	The alarm engineer has logged into the programming menu and is working on site (this message will clear when the engineer logs off or the system is armed).

NOTE *When alarm information is being displayed, pressing the SCROLL key will slow down the display and also allow manual scrolling through the events.*

Zone Faults During Arming

Before attempting to arm the system, ensure that the premises are secure (all doors and windows closed etc.) and the Ready light is on.

If an attempt is made to arm the system with any zones active (e.g. door ajar, open window, etc.) the internal sounders will bleep repeatedly (fault tone) and the display will show the zones that are active.

```
Zone 001 Active
 Front Door
```

The fault tone will stop and the exit tone will resume when all zones are secure. If it is necessary to leave a zone open then it must be omitted (see page 23 for details).

NOTE *If an active zone cannot be secured then it may be 'in fault' in this case contact the alarm company immediately.*

Arm Fail - Failing to Arm

If the exit procedure is started and zones are still 'Active' at the end of the exit procedure, an Internal alarm will occur (internal sounders only) and the strobe light on the external sounder will flash.

NOTE If this occurs the arm fail must be cleared and the zone in fault identified before the system can be armed (see page 19 for details on clearing an Arm Fail).

The Ready LED

To help prevent faults during arming, a Ready light has been provided. The Ready light works as follows:

- If the **Ready** light is **ON** then all zones are secure and the system is ready to be armed
- If the **Ready** light is **OFF** then one or more zones are active, either secure or omit these zones before proceeding
- If the **Ready** light is **FLASHING** then the system has zones (with the 'Force Omit' attribute) that are active, check these zones before proceeding.

Other Messages Displayed during Arming

Zones on Soak Test

If any zones have been put on soak test by the installing company, the message will have to be acknowledged before the system will arm.

Keyfob Low Battery

If you are using a ***Smartkey***™ to arm and disarm your system and a "Low Battery" condition is detected, you will have to acknowledge this every time you arm the system, until the battery or fob has been replaced.

NOTE *Depending on the configuration of your system, it may not be possible to disarm with a code, therefore a low battery condition on your fob should be reported to the installation company as soon as possible. Failure to do this may result in unwanted activations which may have further repercussions.*

2. Using the Alarm System

Introduction

The operation of the system is divided up into two sections, the Arming menu and the User menu.

To access the Arming menu **enter a valid User code** (?)(?)(?)(?). Once in the Arming menu, various functions can be selected by using the (⇕) key. Once a function has been selected **press** (✓)/(Yes) to access that function**.**

To access the User menu **press** (☰)/(Menu) followed by (✓)/(Yes). Once in the User menu, various options can be selected by using the (⇕) key. Once an option has been selected **press** (✓)/(Yes) to access that option**.**

To exit from either menu **press the** (↺)/(Reset) **key** and the display will return to normal.

The diagram on page 12, shows both menus and the functions and options available.

NOTE *The range of available functions and options will depend on the control panel being used (some control panels do not support all of the features) and also the type of user on that system. If a function or option cannot be selected, it may be that it is not assigned to that user (see page 47 for details).*

<u>To access the Arming/User menu, proceed as follows:</u>

The display will normally show the time & date (The top line is programmable).

```
Tue 06 Mar 2005
```

To access the Arming menu enter a valid User code (?)(?)(?)(?) or present your tag

```
Do you want to
Arm System?
```

To select the User menu Press (☰)/(Menu)

```
Do you want
User Menu?
```

To access the User menu Press (✓)/(Yes)

```
Do you want to
View System Log?
```

Press (↺)/(Reset) to exit either menu

The display will return to normal.

The Arming Menu

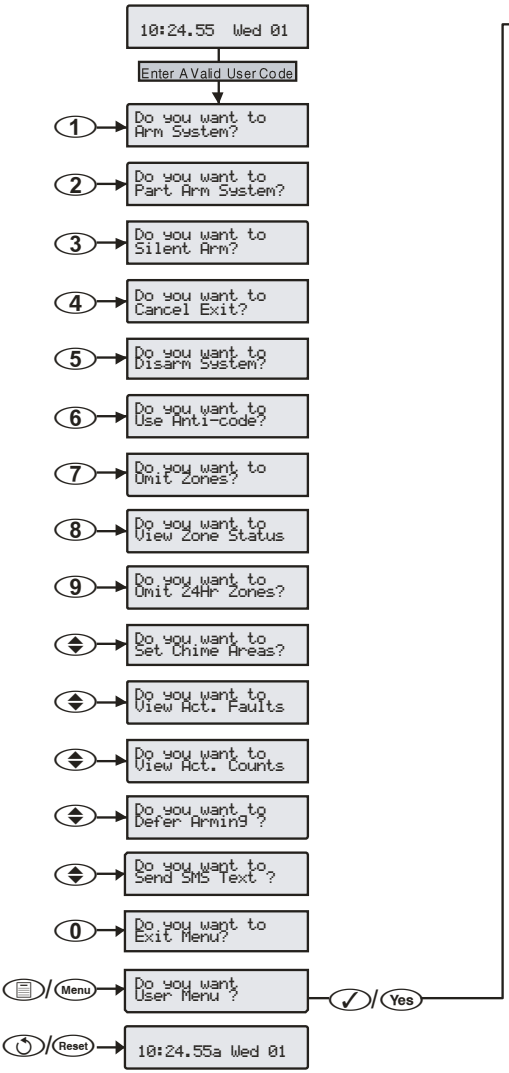

The User Menu

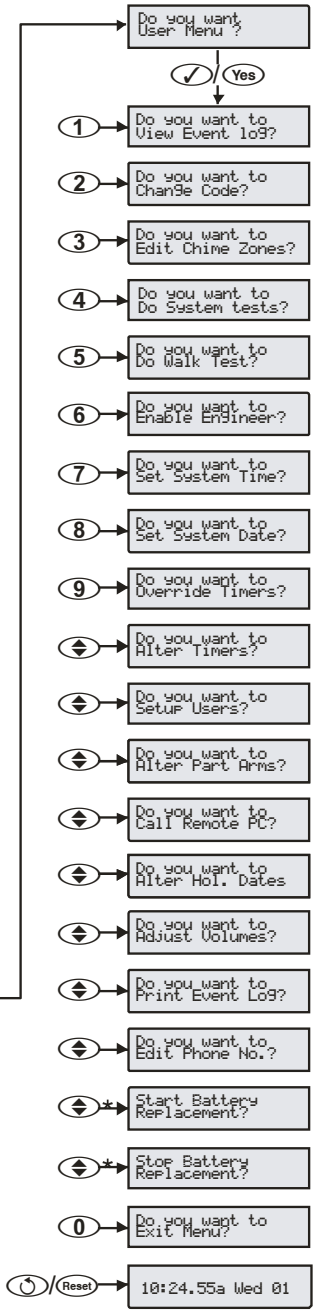

* Only available If enabled by the Engineer

3. Operating the Alarm System

Introduction

The normal day-to-day operations of the system are carried out using the Arming menu i.e. arming, disarming, omitting zones etc.

NOTE

The range of available functions and options will depend on the control panel being used (some control panels do not support all of the features) and also the type of user on that system.

Not all functions are available to all users. If a function cannot be selected, it may be that it is not assigned to that user (see page 47 for details).

If no keys are pressed, the display will return to normal after a pre-programmed time.

The table below shows the various functions available:

Arming Menu		
Key	**Function**	**Page**
0	Arm System	16
1	Part Arm System	17
2	Silent Arming	16
3	Cancel Exit	19
4	Disarm the System	19
5	Use Anti-code	22
6	Omit Zones	23
7	View Zone Status	25
8	Omit 24Hr Zones	26
9	Set Chime Areas	27
▲▼	View Act. Faults	28
▲▼	View Act. Counts	29
▲▼	Defer Arming	30
▲▼	Send SMS Text	31
/ Menu	User Menu	32

To FULL Arm the System

The system is **FULL Armed** when ALL zones are ON (not omitted).

NOTE *Your Installer may have programmed the system so that it can be set by just pressing (🏠)/(Area), if this is the case then there is no need to enter the User code below.*

To arm the system, proceed as follows:

Ensure that the premises are secure (all doors and windows closed etc.) and the Ready light is on.

Enter a valid User code (?)(?)(?)(?)

```
Do you want to
Arm System?
```

Press (2) to Silent arm (if required)

```
Do you want to
Silent Arm?
```

Press (✓)/(Yes) to arm

The exit tone will sound (if silent arm has not been selected)

```
Areas in Exit >
    A.......
```

Leave the premises

When the system has armed the exit tone will stop (if sounding)

```
 Tue 06 Mar 2001
```

The system is now armed.

To PART Arm the System

The system is **PART Armed**, when ONE OR MORE zones have been left OFF (omitted) i.e. the landing or a bedroom.

NOTE

*The system is only **Part Armed** when zones are omitted using the 'Part Arm' procedure (omitting zones manually (see page 23 for details) is not classed as **Part Arming)**.*

The bottom line of the display is programmable for each Part Arm.

Your Installer may have programmed the system so that it can be part armed by just pressing (1), (2) or (3) followed by (🏠)/(Part) if this is the case then there is no need to enter the User code below.

To part arm the system, proceed as follows:

Ensure that the premises are secure (all windows and doors not being omitted are closed) and the Ready light is on.

Enter a valid User code (?)(?)(?)(?)

```
Do you want to
Arm System?
```

Press (🏠)/(Part)

```
Do you want:-
Evening arm
```

Use keys (1) - (3) to select the required part arm

```
Do you want:-
Bedtime arm
```

Press (✓)/(Yes) to arm normally or press (♪)/(Chime) to arm silently

The exit tone will sound (if silent arm has not been selected)

```
Areas in Exit >
    A.......
```

Leave the protected area

When the system has armed, the exit tone (if sounding) will stop

```
Bedtime Arm
    A.......
```

```
 * PART ARMED *
 Tue 06 Mar 2001
```

The system is now part armed.

To ARM Individual Areas

If the system has been set up for multiple areas, each area can be individually selected for **FULL** or **PART** arming as required.

Ensure that the premises are secure (all windows and doors not being omitted are closed) and the Ready light is on.

Enter a valid User code ? ? ? ?

```
Do you want to
Arm system?
```

To select areas for full arming, proceed as follows:

Press / Area

```
Select Areas >
  > ***..... <
```

Use keys 1 - 8 to select the required area (0 selects/deselects all Areas)

```
Select Areas >
  > AB****.. <
```

Press ✓ / Yes or ♫ / Chime to FULL arm

The exit tone will sound (if silent arm has not been selected)

```
Areas in Exit >
    AB......
```

Leave the premises

When the areas have armed, the exit tone (if sounding) will stop

The selected areas are now armed.

```
Areas Armed >
    AB......
```

To select areas for part arming, proceed as follows:

Press / Part 1, 2 or 3 followed by / Area

Then select the area(s) to part arm as for full arm above.

To DISARM the System

The Entry time is divided into two sections, the Entry time and the 2nd Entry time. If the Entry time expires, an Internal alarm will occur and the 2nd Entry time will start. If the 2nd Entry time expires, an Intruder alarm will occur (all internal and external sounders).

NOTE *It is perfectly normal for the 2nd Entry time to be programmed as zero, in which case, an Intruder alarm will occur as soon as the Entry time expires.*

During Entry

To disarm the system, proceed as follows:

Enter the premises via the designated entry point

The entry tone will start

```
Areas in Entry >
    ABC.....
```

Enter a valid User code

? ? ? ?

The entry tone will stop

```
14:46.04p Tue 06
```

The system is now disarmed.

When Not in Entry

To disarm the system, proceed as follows:

The display will look something like this:

```
14:46.04p Tue 06
```

Enter a valid User code

? ? ? ?

```
Do you want to
Disarm System?
```

Press Yes

```
14:46.04p Tue 06
```

The system is now disarmed

To CANCEL the Exit Mode

Once the exit mode has been started you should leave the premise immediately, however, if for some reason you decide not to leave, the exit mode must be cancelled.

To cancel the exit mode, proceed as follows:

Enter a valid User code ? ? ? ?

```
Do you want to
Cancel Exit?
```

Press ✓ / Yes

The exit tone will stop

```
Tue 06 Mar 2001
```

The exit mode has now been cancelled.

To CLEAR an Arm Fail

When the system tries to arm with zones active (open), the internal sounders will sound and the external strobe will be flashing to indicate a problem. For details on preventing an Arm Fail condition, please refer to page 12.

NOTE *If you were not present when the arm fail occurred or you do not clear the arm fail, the internal sounders will continue to sound and the external strobe will continue to flash.*

To clear the arm fail, proceed as follows:

The alarm will be sounding and the display will look something like this:

```
Area ARM FAIL >
   A........
```

Enter a valid User code ? ? ? ?

The internal and external sounders will stop, the external strobe will continue to flash and the number of the zone that caused the arm fail will be displayed (in this case Zone 2).

```
Area ARM FAIL >
   A........
```

```
Zone 002 Active
Bedroom Window
```

Enter a valid User code ? ? ? ? and press ↺/Reset

```
Tue 06 Mar 2001
```

The arm fail has now been cleared.

To SILENCE an Alarm

When an alarm occurs on the system, the internal and external sounders will normally sound for a pre-programmed time (normally 15 minutes).

NOTE *If you were not present when the alarm activated, the internal and external sounders may have already stopped but the external strobe will still be flashing.When alarm information is being displayed, pressing the ⇕ key will slow down the display and also allow manual scrolling through the events.*

To silence an alarm, proceed as follows:

The alarm will be sounding and the display will look something like this:

```
Tue 06 Mar 2001
```

Enter a valid User code ? ? ? ?

The internal and external sounders will stop and the number of the zone that caused the alarm will be displayed (in this case Zone 2)

```
Zone 002 Alarm
14:46.04p Tue 06
```

```
The Hallway Pir
```

The alarm now needs to be reset.

To DISPLAY the cause(s) of System Alerts (Alarms)

When silencing an alarm or unsetting the system after an alarm, the number of the zone(s) will be displayed on the keypad. If several zones were triggered, the display will scroll through each in turn.

After noting the cause of the alarm, the system can be reset as described in 'RESET After an Alarm' below.

System Alerts

When the system has faults to display, or has not been reset after an alarm condition, the display may show '**SYSTEM ALERTS'.**

Enter a valid User code ? ? ? ?

Any alarms or faults will be displayed. If several fault or alarm conditions have been triggered, the display will scroll through each in turn.

After noting the cause of the alarm or fault, the system can be reset as described in 'RESET After an Alarm' below.

NOTE *Some action may be required to clear the cause of the alarm or fault in order to successfully reset the panel.*

To RESET After an Alarm

If the display shows 'SYSTEM ALERTS', follow the steps described in 'To DISPLAY the causes of System Alerts' above, before attempting to reset.

USER Reset

Once the alarm has been silenced (see above), the system will need to be reset.

NOTE *If the system has been programmed to be reset by an Engineer, pressing ↺/Reset will not return the display to normal, if this is the case see ENGINEER Reset (page 20) for details.*

The system may have been programmed to be reset by Anti-code, if this is the case, see ANTI-CODE Reset (page 20) for details.

To reset the alarm, proceed as follows:

Enter a valid User code ? ? ? ?

```
Do you want to
Arm system?
```

Press ↺/Reset

The external strobe will stop, the system will chime
and the display will return to normal.

ENGINEER Reset

If the system has been programmed to be reset by an Engineer following an alarm activation, you will still be able to silence the alarm by entering a valid User code (see page 20 for details).

NOTE *The system cannot be armed again until the alarm has been reset.*

To reset the alarm, proceed as follows:

Contact the telephone number on the display (if programmed) or the telephone number on the last page of this User Guide.

ANTI-CODE Reset

If the system has been programmed to be reset using an Anti-Code following an alarm activation, you will still be able to silence the alarm by entering a valid User code (see page 20 for details).

NOTE *The system cannot be armed again until the alarm has been reset.*

To reset the alarm, proceed as follows:

Enter a valid User code ? ? ? ?

```
Press RESET for
Anti-code
```

Press ↺ / Reset

The display will show a random code number i.e. 4281

```
Quote > 4281
Reply > ----
```

Contact the telephone number on the display (if programmed) or the telephone number on the last page of this User Guide and quote the random code number.

You will be given a 4-digit Anti-Code i.e. 5624

Enter the Anti-code that has been given to you ? ? ? ?

```
Quote > 4281
Reply > 5624
```

Press ✓ / Yes

If the Anti-code is correct, the keypad will chime to indicate that the system has been reset and the display will return to normal.

To OMIT Zones

It is possible to exclude (omit) individual zones when arming i.e. if a zone is 'in fault'. Users with access to this function can only omit zones that have been programmed as 'Omittable'.

NOTE

If the zone can be omitted, there will be a star to the right of the zone number. Only zones that have the 'Omit' attribute assigned to them can be omitted.

A star will appear to the left of the zone number to indicate that the zone has been selected for omitting.

All omitted zones will be automatically reinstated the next time the system is disarmed, unless programmed otherwise.

To re-instate zones manually, simply follow the instructions again. However, when the [Home]/[Omit] key is pressed this time, the zones will be re-instated.

To omit zones when arming, proceed as follows:

Enter a valid User code [?][?][?][?] and press [Home]/[Omit]

```
Zone 001*Secure
Front Door     >
```

Enter a zone number [?][?][?] or use the [↕] key to search

```
Zone 010*Active
Loun9e Detector >
```

Press [Home]/[Omit] to omit the selected zone

```
Zone*010*Active
is Omitted
```

```
Zone*010*Secure
Loun9e Detctor >
```

Repeat for other zones if required

Press [Menu]/[Menu] when finished

```
Do you want to
Arm System?
```

Continue to arm the system as normal

The selected zones are now omitted (the omit light will be on).

To Turn CHIME On and Off

The system can be set up so that activating (opening) certain zones will cause the internal sounders to chime. This would normally be used on a front door, exit button etc.

NOTE *Zones will only cause the internal sounders to chime if they are selected for chime (see page 37 for details on selecting which zones chime).*

Once a zone has been selected for chime, the Chime facility can be manually turned on and off as required.

NOTE *The system can also be programmed to automatically turn Chime on and off under certain conditions i.e. certain times of the day, door left open etc.*

If no zones have been programmed for chime, then turning Chime on and off will have no effect.

To turn CHIME On proceed as follows:

Press ♫ / Chime

The Chime tone will sound.

To turn CHIME Off proceed as follows:

Press ♫ / Chime

The Fault tone will sound.

To VIEW the Status of Zones

Users with access to this feature will be able to check the status of each zone on the system to see whether it is in 'Fault', 'Secure', 'Tamper', 'Shorted' or 'Inactive'.

To view the status of zones, proceed as follows:

Enter a valid User code ? ? ? ?

```
Do you want to
Arm System?
```

Press 8

```
Do you want to
View Zone Status
```

Press ✓/Yes

```
Zone 001 Secure
Front Door     >
```

Enter a zone number ? ? ? or use the ⬍ key to search

```
Zone 010 Secure
Loun9e Detector >
```

(Pressing ♫/Chime will make the zone chime every time it is activated (an Arrow will appear to the right of the zone number), to clear the Chime, press ♫/Chime again)

(Pressing ⌂/Area will display the zone text)

(Every time the selected zone is activated, its status will be displayed and the keypad will chime, if selected)

```
Zone 010>Active
Loun9e Detector >
```

```
Zone 010 Secure
Loun9e Detector >
```

Press ☰/Menu when finished

Press ↺/Reset to exit the menu

The display will return to normal.

To OMIT 24 Hour Zones

It is possible to exclude (omit) or include 24 Hour zones whilst the system is disarmed to allow access to an area. Users with access to this function can only omit zones that have been programmed as 'Omittable'.

NOTE

If the zone can be omitted, there will be a star to the right of the zone number. Only zones that have the 'Omit' attribute assigned to them can be omitted.

A star will appear to the left of the zone number to indicate that the zone has been selected for omitting.

To re-instate the zones, simply follow the instructions again. However, when the Omit key is pressed on this occasion, the zones will be re-instated.

To omit 24 Hour zones, proceed as follows:

Enter a valid User code ? ? ? ?

```
Do you want to
Arm System?
```

Press 9

```
Do you want to
Omit 24Hr Zones
```

Press ✓/Yes

```
Zone 001 Secure
Front Door     >
```

Enter a zone number ? ? ? or use the ⬍ key to search

```
Zone 015 Secure
Back Door      >
```

Press Omit to omit the selected zone

```
Zone*015 Secure
is Omitted
```

```
Zone*015 Secure
Back Door      >
```

Repeat for other zones

Press Menu when finished

Press Reset to exit the menu

The display will look like this:

```
* 24Hr Omitted *
Tue 06 Mar 2001
```

The selected 24 Hour zones are now omitted.

To SELECT Areas for Chime

When a zone is enabled for Chime the Keypad will generate a chime tone every time the zone is activated. Users with access to this function will be able to turn Chime on and off for selected areas.

Zones within an area can be individually programmed for Chime in **Edit Chime Zones** (see page 37 for details).

NOTE

Only areas that have been programmed for 'Chime' can be selected. A star means the area can be selected and a dot means the area cannot be selected.

Pressing (0) will select/deselect all areas.

Pressing (⌂)/(Area) will toggle between areas A to H and I to P

To select an area for Chime, proceed as follows:

Enter a valid User code (?)(?)(?)(?)

```
Do you want to
Arm system?
```

Press (♫)/(Chime)

```
Enable Chime on
  > ***..... <
```

Use keys (1) - (8) to select/deselect areas

(i.e. (1), (2) and (3) = Areas A, B and C)

```
Enable Chime on
  > ABC..... <
```

Press (✓)/(Yes) when finished

Press (↺)/(Reset) to exit the menu

The display will return to normal.

To VIEW Activity Faults

If any zones with the 'Activity' attribute have not been activated within a certain time period, an activity fault will be displayed at the time of arming. Users with access to this function will be able to view the activity faults.

NOTE

The system may have been programmed so that an activity fault will not allow arming. If this is the case the system can only be armed once the zone in fault has been activated (forced walk test).

Only zones with the 'Activity' attribute that have not been activated will be shown.

To view activity faults, proceed as follows:

Enter a valid User code ? ? ? ?

```
Do you want to
Arm system?
```

Press ⇕ until the display looks like this:

```
Do you want to
View Act. Faults
```

Press ✓/Yes

```
Zone 001 Secure
Front Door     >
```

Press ⇕ to scroll up and down through the zones

Press ☰/Menu when finished

Press ↺/Reset to exit the menu

The display will return to normal.

To VIEW Activity Counts

Users with access to this menu will be able to view the number of times that zones with the 'Activity' attribute have been activated, for each area.

To view activity counts, proceed as follows:

Enter a valid User code ? ? ? ?

```
Do you want to
Arm System?
```

Press ⇕ until the display looks like this:

```
Do you want to
View Act. Counts
```

Press ✓/Yes

```
Activity A> 0000
Total Count 0005
```

Use keys 1 - 8 to select an area or use the ⇕ key to search

(To reset the activity counter press ↺/Reset)

```
Activity B> 0005
Total Count 0000
```

Press ☰/Menu when finished

Press ↺/Reset to exit the menu

The display will return to normal.

To DEFER Arming

If the system is configured to ARM automatically at a predetermined time it is possible to defer the arming to another time. The deferred arming time will only apply to the next arm, the following automatic arm will happen at the usual time. Deferring arming can be achieved in two ways.

To defer arming BEFORE arming starts:

Enter a valid User code

? ? ? ?

```
Do you want to
Arm System?
```

Press ⇕ until the display looks like this:

```
Do you want to
Defer Arming ?
```

Press ✓/Yes

```
Defer Arming To>
      12:00
```

Use the keypad to type a new time,

```
Defer Arming To>
      16:00
```

press ✓/Yes when finished

```
Do you want to
Defer Arming ?
```

Press ↺/Reset when finished

```
 Premier Elite
10:07.05 Thu 23
```

The display will return to normal.

To defer WHEN arming starts:

```
TIME ARMING >
A...............
```

Enter a valid User code ? ? ? ?

```
Do you want to
Defer Arming ?
```

Press ✓/Yes

```
 Premier Elite
10:07.05 Thu 23
```

The system will return to Time/Date displayed on the keypad and defer Time Arming of the system, for example by 30 mins, or whatever has been programmed as the defer arming time.

NOTE *Programming of the Defer Arming timer is not a User function.*

Sending a Text Message to a Mobile Phone

If the control panel has a *Com2400* or *ComGSM* fitted, the keypad can be used to send a Text message directly to any of the pre-programmed mobile phone numbers.

To send a Text Message, proceed as follows:

Enter a valid User code ? ? ? ?

```
Do you want to
Arm System?
```

Press ⇕ until the display looks like this:

```
Do you want to
Send SMS Text ?
```

Press ✓/Yes

```
^            >TXT
```

Use the keypad to type a message, press ✓/Yes when finished

(For details on programming text please refer to page 51).

```
Telephone No. 1>
0780123456
```

Press ⇕ to select the required telephone number

```
Telephone No. 3>
07890123456
```

Press ✓/Yes when finished

```
Tue 06 Mar 2001
```

The display will return to normal.

4. Programming the Alarm System

Introduction

Advanced operations of the system are carried out using the User Menu i.e. System Tests, Assigning Users etc.

NOTE

The range of available functions and options will depend on the control panel being used (some control panels do not support all of the features) and also the type of user on that system.

Not all options are available to all users. If an option cannot be selected, it may be that it is not assigned to that user (see page 47 for details).

If no keys are pressed, the display will return to normal after a pre-programmed time.

The table below shows the various options available:

User Menu		
Key	**Option**	**Page**
1	View Event Log	33
2	Change Code	36
3	Edit Chime Zones	37
4	System Tests	38
5	Walk Test	39
6	Enable Engineer	40
7	Set System Time	41
8	Set System Date	42
9	Override Timers	43
↕	Alter Timers	44
↕	Setup Users	45
↕	Alter Part Arms	55
↕	Call Remote PC	56
↕	Alter Hol. Dates	57
↕	Adjust Volumes	58
↕	Print Event Log	59
↕	Edit Phone No.	60
↕	Change Ricochet Batteries	61

Viewing the Event Log

Users with access to this option can view the system Event Log. This log records all of the events that occur on the system, i.e. Users entering their codes to arm or disarm the system, alarms, failures to arm etc. along with the time and date on which they occurred.

NOTE

The down key moves you to the previous event (backwards in time), and the up key moves you forwards again.

The / Area key toggles between the area information and the time/date.

For a full list of Event Log descriptions, please refer to the Master User Guide.

To view the Event Log, proceed as follows:

Enter a valid User code ? ? ? ?

```
Do you want to
Arm system?
```

Press / Menu

```
Do you want
User Menu?
```

Press / Yes

```
Do you want to
View System Log?
```

Press / Yes

```
Code 01 David
 12:28.04 06/03
```

Press to scroll up and down through the Log

```
Areas Disarmed
 12:28.04 06/03
```

Press / Area to toggle between the area information and the time/date

Press / Part to display zone text (where applicable)

```
Areas Disarmed
    A.......
```

Press / Menu when finished

Press / Reset to exit the menu

The display will return to normal.

Event Log Descriptions

Log Event	Description
KSW ### Active	A Keyswitch zone type has been activated (zone number ###)
RKP #,# MEDICAL	A Medical alarm (7 & 9) has occurred from keypad number #,#
RKP #,# FIRE	A Fire alarm (4 & 6) has occurred from keypad number #,#
RKP AUD PA #,#	An Audible PA alarm (1 & 3) has occurred from keypad number #,#
RKP SIL PA #,#	A Silent PA alarm (1 & 3) has occurred from keypad number #,#
DURESS	User ## has entered a Duress Code at a keypad
ALARM Active	An Intruder alarm signal has been activated for area ?
BELL Active	The Bell output has been activated for area ?
REARM LOCK ###	Zone ### has locked out after reaching its re-arm limit (after causing an alarm)
CROSS ###	A Verified Cross Zone Alarm has occurred from zone ###
USER ##	User ## has entered their code
AREAS EXIT	The Exit mode has been started for area ?
ARMING FAILED	A Exit Error-Arm Fail has occurred on area ?
AREAS ENTRY	The Entry mode has been started for area ?
ARMING SUITE	Area Arm Suite # was used to arm the system
ARMED WITH L/F	The system has been armed with a Line Fault condition present
AREA Armed	Area ? has been armed
AREA Disarmed	Area ? has been disarmed
PART Armed	Area ? has been Part Armed
TIME Armed	Area ? was armed automatically using one of the timer controls
TIME Disarmed	Area ? was disarmed automatically using one of the timer controls
DEFERRED	The arming mode was deferred for area ?
ALARM ABORT	An Open After Alarm-Abort has occurred for area ?
REMOTE Armed	Area ? was armed using the *Wintex UDL* software
REMOTE Disarmed	Area ? was disarmed using the *Wintex UDL* software
QUICK Armed	Quick Arm from keypad #,#
RECENT Armed	Area ? has been armed recently
#,# RESET AREAS	Area have been reset using keypad #,# following an Intruder alarm
Engineer Reset	A reset has been performed using an Engineers code
Anti-Code Reset	A reset has been performed using the Anti-code reset procedure
Remote Reset	A reset has been performed using the ‘Remote Reset’ input
Redcare Reset	A reset has been performed by the Redcare
Key switch Reset	A reset has been performed using a key switch
User Reset	A reset has been performed using a User code
EXP #,# Reset	A reset has been performed using the input on expander #,#

Remote PC Reset	A reset has been performed by the remote download PC
FUSE #,# FAIL	The Auxiliary 12V Fuse in device #,# has failed
AC POWER	The control panel has registered a AC Mains failure
LOW BAT	The control panel has registered a low battery condition
POWERED UP	System Power Up (without doing a factory restart)
BELL FUSE	The control panel Bell Fuse has failed
ATS FLT Alarm	There is a problem with the telephone line
Panel Line Fault	The control panel line fault input has been activated
Redcare Line Fault	The Redcare has detected a line fault
Com??? Line Fault	The Com300, 2400 or ISDN has detected a line fault
Exp #,# Line Fault	The Input on expander #,# has been activated
COMS FAILED	The *Communicator* has failed to report to the Alarm Receiving Centre
DOWNLOAD START	An Upload/Download has been initiated
DOWNLOAD END	The Upload/Download has finished
LOG ALERT	80% of the Event Log has filled (since the last Upload/Download)
DATE CHANGED	The control panel Time has been changed
TIME CHANGED	The control panel Date has been changed

Event Log Hotkeys

When viewing the system log there are 9 hotkeys available. These hotkeys allow certain events to be found easier without the need for searching.

The following hotkeys are available:

1 = Priority Alarms (PA, Fire etc.)
2 = Normal Alarms (Guard, 24hr, Entry/Exit etc.)
3 = Opens and Closings (Arm, Disarm etc.)
4 = Omits and Reinstates (Zone Omits etc.)
5 = Maintenance (System Tests, Engineer Program etc.)
6 = Tampers (Zone, Bell, Aux etc.)
7 = Test Calls (Communicator Active, successful etc.)
8 = Entry/Exit (Entry and Exit Procedures)
0 = User Codes (User codes being used)

Changing Your User Code

Users with access to this option can change their own User codes. User codes are unique to each user and can be 4, 5 or 6 digits long.

NOTE *Only the User code that is entered to access the change code menu will be changed.*

Before changing your code, it is vital that you memorise or write down the new code you are about to program. Failure to remember your code will require an engineer visit to re-program a new code for you. This may incur a call-out charge.

To change your User code, proceed as follows:

Enter the User code that requires changing ? ? ? ?

```
Do you want to
Arm System?
```

Press / Menu

```
Do you want
User Menu?
```

Press ✓ / Yes

```
Do you want to
View Event Log?
```

Press 2

```
Do you want to
Change Code?
```

Press ✓ / Yes

```
Enter New Code>
      ------
```

Enter a new 4, 5 or 6-digit User code ? ? ? ?

```
Enter New Code>
      --8989
```

Press ✓ / Yes to accept the new code

Press ↺ / Reset to exit the menu

The display will return to normal.

Setting up Zones for Chime

Users with access to this option will be able to select which zones cause the internal sounders to chime every time they are activated. Chime would normally be used on a front door, back door, exit button etc.

NOTE *Zones will only cause the internal sounders to chime if Chime is turned on (see page 24 for details on turning Chime on and off).*

To setup zones for Chime, proceed as follows:

Enter a valid User code ? ? ? ?

```
Do you want to
Arm System?
```

Press / Menu

```
Do you want
User Menu?
```

Press / Yes

```
Do you want to
View Event Log?
```

Press / Chime

```
Do you want to
Edit Chime Zones
```

Press / Yes

```
Zone 001 Silent
Front Door     >
```

Enter the zone number ? ? ? or use the key to search

```
Zone 015 Silent
Back Door      >
```

Press / No to select Chime

Once for Chime 1, twice for Chime 2 etc

```
Zone 015 Chime 2
Back Door      >
```

Repeat for other zones if required

Press / Menu when finished

Press / Reset to exit the menu

The display will return to normal.

Testing the Sounders and Strobe

Users with access to this option can test various system outputs to ensure that they operate correctly. These include any outputs that have been programmed for specific operations i.e. bringing on floodlights, sounding buzzers etc. The internal sounders, speakers and the external sounder can also be tested to ensure that they are operating correctly. Hold off mode should be enabled if replacing sounder batteries. See page 61.

NOTE *Any outputs that have been left 'On' will be turned 'Off' when the menu is exited.*

To test the Sounders and Strobe, proceed as follows:

Enter a valid User code ? ? ? ?

```
Do you want to
Arm System?
```

Press / Menu

```
Do you want
User Menu?
```

Press / Yes

```
Do you want to
View Event Log?
```

Press 4

```
Do you want to
Do System tests?
```

Press / Yes

```
Push YES to test
Bell is     >Off
```

Press / Omit to put any sounders into hold off mode

Press 0 to select the BELL test
Press 1 to select the STROBE test
Press 2 to select the SPEAKER test
Press 3 to select the USER OUTPUTS test
Press 4 to select the DISPLAY test

i.e. 2 for Speaker test

```
Push YES to test
Speaker     >Off
```

Press / Yes to test the selected output

Press / Menu, when finished

Press / Reset to exit the menu

The display will return to normal.

Walk Testing the System

Users with access to this option can walk test any of the zones on the system to ensure that they operate correctly. A walk test can only be performed when the system or area is disarmed. 24 Hour zones (except Fire and Tampers) are disabled during walk test allowing Audible PA buttons, Silent PA buttons, etc. to be tested.

To perform a walk test, proceed as follows:

Enter a valid User code ? ? ? ?

```
Do you want to
Arm System?
```

Press / Menu

```
Do you want
User Menu?
```

Press ✓ / Yes

```
Do you want to
View Event Log?
```

Press 5

```
Do you want to
Do Walk test?
```

Press ✓ / Yes

```
Walk test areas>
  > ******.. <
```

Use keys 1 - 8 to select an area for walk testing

```
Walk test areas>
  > A*****.. <
```

Press ✓ / Yes to start the walk test

```
    * NONE *
```

Every time zones are activated the keypad will chime

```
Zone 10>Active
Lounge Detector >
```

Press / Menu, when finished

Press / Reset to exit the menu

The display will return to normal.

Enabling Engineer Access

If Engineer access (either on-site or via remote download computer) has been programmed as User authorised, this option must be used to allow the Engineer access to the programming menu. Users with access to this option can authorise Engineer access.

NOTE *Engineer access is only permitted for 4 hours after it is enabled, after which, it will automatically be disabled again.*

To enable Engineer access, proceed as follows:

Enter a valid User code ? ? ? ?

```
Do you want to
Arm System?
```

Press / Menu

```
Do you want
User Menu?
```

Press / Yes

```
Do you want to
View Event Log?
```

Press until the display looks like this:

```
Do you want to
Enable Engineer?
```

Press / Yes

```
Engineer Access>
Disabled
```

Press / No to enable/disable Engineer access

```
Engineer Access>
Enabled
```

Press / Yes

Press / Reset to exit the menu

The display will return to normal.

Setting the System Time

The alarm system has a real time clock that is used to date and time stamp events that are recorded within the system Log. Users with access to this option will be able to set the Time on your alarm system.

To set the System Time, proceed as follows:

Enter a valid User code ? ? ? ?

```
Do you want to
Arm System?
```

Press / Menu

```
Do you want
User Menu?
```

Press ✓ / Yes

```
Do you want to
View Event Log?
```

Press 7

```
Do you want to
Set System Time?
```

Press ✓ / Yes

```
Enter New Time >
     12:28 BST
```

Enter the new time (24 Hour format) H H M M

```
Enter New Time >
     21:45 BST
```

Press / Reset to change between BST and GMT

```
Enter New Time >
     21:45 GMT
```

Press ✓ / Yes

Press / Reset to exit the menu

The display will return to normal.

Setting the System Date

The alarm system has a real time clock that is used to date and time stamp events that are recorded within the system Log. Users with access to this option will be able to set the Date on your alarm system.

To set the System Date, proceed as follows:

Enter a valid User code (?)(?)(?)(?)

```
Do you want to
Arm System?
```

Press (▤)/(Menu)

```
Do you want
User Menu?
```

Press (✓)/(Yes)

```
Do you want to
View Event Log?
```

Press (8)

```
Do you want to
Set System Date?
```

Press (✓)/(Yes)

```
Enter New Date >
    06/03/01
```

Enter the new date (D)(D)(M)(M)(Y)(Y)

```
Enter New Date >
    24/05/01
```

Press (✓)/(Yes) **when finished**

Press (↺)/(Reset) **to exit the menu**

The display will return to normal.

Overriding the Control Timers

The system has Control Timers that may have been programmed to activate outputs, arm areas or lockout users at different times of the day. Users with access to this option can turn the control timers on and off manually if required.

To turn the control timers on & off, proceed as follows:

Enter a valid User code (?)(?)(?)(?)

```
Do you want to
Arm System?
```

Press (≡)/(Menu)

```
Do you want
User Menu?
```

Press (✓)/(Yes)

```
Do you want to
View Event Log?
```

Press (⇕) until the display looks like this:

```
Do you want to
Override Timers?
```

Press (✓)/(Yes)

```
Timer Controls
On are ........
```

Use keys (1) **-** (8) **to toggle control timers on and off**

(i.e. 1 = Timer 1)

```
Timer Controls
On are 1.......
```

Press (✓)/(Yes) **when finished**

Press (↺)/(Reset) **to exit the menu**

The display will return to normal.

Altering the Control Timers

The system has Control Timers. Each timer has two ON and OFF times, and can be programmed to operate on any day of the week. Once configured the timers can be used to automatically arm or disarm areas, lockout User codes and control outputs etc. Users with access to this option can program the Control Timers.

To program control timers, proceed as follows:

Enter a valid User code

(?) (?) (?) (?)

```
Do you want to
Arm System?
```

Press (Menu)

```
Do you want
User Menu?
```

Press (Yes)

```
Do you want to
View Event Log?
```

Press (⇕) until the display looks like this:

```
Do you want to
Change Ctl times
```

Press (Yes)

```
Control Timer 1a
is On at >00:00
```

Use (⇕) to Select a Control Timer from 1 to 8

```
Control Timer 2a
is On at >00:00
```

Enter the first On time (24 Hour format)

(H) (H) (M) (M)

```
Control Timer 2a
is On at >12:35
```

Press (Yes) when finished

```
Timer 2a On Days
................
```

Use keys (1) - (7) to select the On days (SUN to SAT)

(i.e. (1) and (2) = Sunday and Monday)

```
Timer 2a On Days
SuMo............
```

Press (Yes) when finished

```
Control Timer 2a
is Off at >12:00
```

Enter the first Off time (24Hour format)

(H) (H) (M) (M)

```
Control Timer 2a
is Off at >14:00
```

Press (Yes) when finished

```
Timer 2a Off Days
................
```

Use keys (1) - (7) to select the first Off days (SUN to SAT)

(i.e. (6) and (7) = Friday and Saturday)

```
Timer 2a Off Days
SuMo............
```

Press (Yes) when finished

```
Control Timer 2b
is On at >00:00
```

Repeat programming for the timers Second On times, On days, Off times and Off days

Repeat for other Control Timers

Press (Menu) when finished

Press (Reset) to exit the menu

The display will return to normal.

Adding New Users to the System

When the control panel is first installed, only the Engineer code and the Master User code exist, additional users need to be added to the alarm system manually.

NOTE *The factory default Master User code is (5)(6)(7)(8).*

The Master User code is always User 01 and can never be deleted.

Programming New Users

Each User on the system is made up of the following elements. **1**, **2 or 8**, **3** and **4,** these are essential for the code/TAG to function correctly, items **5, 6** and **7** are optional.

1. User Number
When users are assigned to the system, they need to be identified by the control panel. Each user is identified as Users 01, 02, 03 etc. User 01 is always the Master User.

2. User Code
This is a unique 4, 5 or 6 digit code number that is assigned to a user (the system will allow a mixture of different lengths). The User code must be entered at a keypad to operate the alarm system.

3. User Areas
Any number of areas can be assigned to the selected user. Assigning areas to a user determines which areas can be armed, disarmed, reset etc. by that user. In addition, assigning areas to a user determines which of the area related functions i.e. omitting zones, silent arming etc. will be available to that user.

4. User Types
The User type determines which functions are available to the user i.e. arming, disarming, resetting etc. and also, which options the user can access i.e. Setup Users, System Tests etc.

5. User Time Lock
This option allows the selected user to be denied access to the system at different times of the day and days of the week. When a Control Timer is assigned to a user, the User code will not allow access to any functions during the timers 'On' period.

6. User Name Text
Each user can be assigned up to 8 characters of name text. The name text is displayed whenever a code is entered and also when reading the log, making identification of people using the alarm easier.

7. Door Control
This option would normally be used for access control. Users are able to open/unlock doors that are assigned to their user code.

8. Proximity TAG
As well as or instead of operating the alarm system with a 4, 5 or 6-digit code number, it is also possible to operate it by presenting a Proximity TAG to the keypad (this requires a Proximity keypad).

User Types

The User type determines which functions are available to the user i.e. arming, disarming, resetting etc. and also, which options the user can access i.e. Setup Users, System Tests etc. The following User types are available:

1: Master
Master users can arm, disarm, omit zones, silence alarms and reset their assigned areas. In addition, Master users can access all User menu options. Master users can also change their own User codes and assign new users to the system. The Master user will also activate any output programmed as 'Door Strike'.

2: Manager
Manager users can arm, disarm, omit zones, silence alarms and reset their assigned areas. In addition, Manager users can access all User menu options except Setup Users. Manager users can also change their own User codes.

3: Standard
Standard users can arm, disarm, omit zones, silence alarms and reset their assigned areas. In addition, Standard users can access all User menu options except for Setup Users, System Tests, and Change Timers. Standard users can also change their own User codes.

4: Local
Local users behave the same way as Standard users. However, Local users can only arm and disarm areas assigned to their codes from keypads assigned to the same areas.

5: Duress
Duress users behave the same way as Standard users. However, Duress users will activate any outputs programmed as 'Panic Alarm' or 'Duress' whenever their code is entered.

6: Arm/Reset Only
Arm Only users can only arm and reset their assigned areas.

Reset Only users can only disarm following an alarm and then reset, rearm the alarm again.

7: Door Strike
Door Strike users have no access to User functions or Menu options. However, Door Strike users will activate any outputs programmed as 'Door Strike' whenever their code is entered.

8: Vacation
Vacation users behave as Standard users. However, Vacation users are automatically deleted the first time that the Master User code (User 01) is used to disarm the system.

NOTE *A Vacation user is only deleted by the Master user after it has been used to disarm the system at least once.*

9: Custom
Custom users can access any functions and User menu options that have been assigned to them in 'User Options 1 or 2' and 'User Config.'. This flexibility allows new User types to be created that have their own unique set of characteristics. Any number of Custom users can be assigned to the system and each one will respond differently, depending on the functions and features that have been assigned to them.

Available Options

The table below shows the options that are available to each user.

NOTE

*All users that have access to the '**Arming Menu'** have the ability to '**View Zone Status**', '**Set Chime Areas**', '**View Act. Faults**' and '**View Act. Counts**'.*

*All users have access to the '**User Menu**' have the ability to '**View Event Log**', '**Adjust Volumes**' and '**Print Event Log**'.*

User Options 1									
Engineer	**Master**	**Manager**	**Standard**	**Local**	**Duress**	**Arm Only**	**Door Strike**	**Vacation**	**Custom**
Arming	Arming	Arming	Arming	Arming	Arming	Arming	-	Arming	Arming
Disarming	Disarming	Disarming	Disarming	Disarming	Disarming	-	-	Disarming	Disarming
Omitting	Omitting	Omitting	Omitting	Omitting	Omitting	-	-	Omitting	Omitting
Eng. Reset	-	-	-	-	-	-	-	-	-
-	-	-	-	Local Arming	-	-	-	-	-
-	-	-	-	Local Disarm	-	-	-	-	-
-	-	-	-	-	-	-	-	-	-
Disarm First	Disarm First	- Disarm First	Disarm First	Disarm First	Disarm First	-	-	Disarm First	Disarm First

User Options 2									
Engineer	**Master**	**Manager**	**Standard**	**Local**	**Duress**	**Arm Only**	**Door Strike**	**Vacation**	**Custom**
User Menu	User Menu	User Menu	User Menu	User Menu	-	User Menu	-	User Menu	User Menu
Eng. Program	-	-	-	-	-	-	-	-	-
-	-	-	-	-	-	-	-	-	-
-	-	-	-	-	-	-	-	Vacation	-
Door Strike	Door Strike	-	-	-	-	-	Door Strike	-	-
Call Rem PC	Call Rem PC	Call Rem PC	-	-	-	-	-	-	-
-	-	-	-	-	Duress Code	-	-	-	-
Open/Close	Open/Close	Open/Close	Open/Close	Open/Close	Open/Close	Open/Close	-	Open/Close	Open/Close

User Config									
Engineer	**Master**	**Manager**	**Standard**	**Local**	**Duress**	**Arm Only**	**Door Strike**	**Vacation**	**Custom**
Change Code	Change Code	Change Code	Change Code	Change Code	-	-	-	-	-
Chime Zones	Chime Zones	Chime Zones	Chime Zones	Chime Zones	-	-	-	-	-
Change Timer	Change Timer	Change Timer	-	-	-	-	-	-	-
System Tests	System Tests	System Tests	-	-	-	-	-	-	-
Setup Users	User Setup	-	-	-	-	-	-	-	-
Eng. Access	-	-	-	-	-	-	-	-	-
Add Eng Code	-	-	-	-	-	-	-	-	-
NVM Locking	-	-	-	-	-	-	-	-	-

User Options 1

This menu defines which options are available to the user when their code is entered. This menu is not available to all users.

Press ⬍ to scroll through the options and press ✗/No to select them or use keys 1 - 8 ('Letter' = option **IS** selected, 'Star' = option is **NOT** selected).

The following options are available:

A - Arming
Areas assigned to the selected user can be armed.

D - Disarming
Areas assigned to the selected user can be disarmed.

O - Omitting
Zones assigned to the same areas as the selected user can be omitted, providing that they have the 'Omit' attribute assigned to them.

R - Eng. Reset (Engineers only)
Areas programmed as 'Engineer Reset' can be reset after an Alarm has occurred.

a - Local Arming
The User can only arm areas that the keypad is assigned to.

d - Local Disarm
The User can only disarm areas that the keypad is assigned to, or areas that are in entry or alarm (provided that the code has that area assigned to it).

Y - Auto 'YES'
After a code is entered, pressing ✓/Yes to confirm the next action is not required.

F - Disarm First
If an area is armed and the user enters their code, the 'Disarm' option is displayed first.

The following attributes are only available on the *Premier 24*.

NOTE Some of the following options may not always be selectable or de-selectable.

T - Lock TAG = PGM2
The Users TAG is disabled whenever PGM2 is active.

C - Lock Code = PGM3
The Users code is disabled whenever PGM3 is active (default = during the Entry mode).

U - Lock User = PGM4
The Users TAG and Code is disabled whenever PGM4 is active (default = Control Timer 4).

O - Open/Close
The selected user will report open (disarm) and close (arm) events to an Alarm Receiving Centre every time they arm or disarm.

User Options 2

This menu defines which options are available to the user when their code is entered. This menu is not available to all users.

Press ⇕ to scroll through the options and press ✗/No to select them or use keys 1 - 8 ('Letter' = option **IS** selected, 'Star' = option is **NOT** selected).

The following options are available:

U - User Menu
The selected user has access to the User menu. However, the selected user will only have access to options assigned in 'User Config.' (see page 50 for details).

E - Eng. Program (Engineers only)
Only Available to Engineers.

D - Dual Code
The selected user can only access an area when a second User code (with the 'Dual Code' attribute and also assigned to the same area) is entered. Dual Code users will also activate the '1st and 2nd Code' output type.

V - Vacation
The selected user is enabled the first time it is used to disarm the system and can be used as many times as required. However, it will be automatically deleted the first time that the User 01 code is used to disarm. Vacation users will only be deleted by the Master user, once they have been used on the system.

S - Door Strike
The selected user will activate any outputs programmed as 'Door Strike', whenever their codes are entered.

R - Call Rem. PC
The selected user has access to the 'Call Remote PC' option, allowing them to initiate a call to a remote Upload/Download PC (see page 56 for details).

C - Duress Code
The selected user will activate any outputs programmed as 'Duress', whenever their codes are entered.

O - Open/Close
The selected user will report open (disarm) and close (arm) events to an Alarm Receiving Centre every time they arm or disarm.

User Config.

This menu defines which menu options are available to the user when their code is entered.

This menu will only be displayed if a Custom User type is selected AND 'User Menu' (**User Option: U**) is enabled (see page 49 for details).

Press ⬍ to scroll through the options and press X/No to select them or use keys 1 - 8 ('Letter' = option **IS** selected, 'Star' = option is **NOT** selected).

The following options are available:

C - Change Code
The selected user can change their own User code.

Z - Chime Zones
The selected user can access the 'Edit Chime Zones' option, allowing them to select which zones chime when activated (see page 37 for details).

T - Change Timers
The selected user can access the 'Override Timers' (see page 43 for details) 'Alter Timers' (see page 44 for details) 'Alter Part Arms' (see page 55 for details) 'Alter Hol. Dates' (see page 57 for details) and 'Edit Phone No.' (see page 60 for details) menu options.

S - System Tests
The selected user can access the 'System Tests' option, allowing them to walk test zones, activate the external sounder etc. (see page 38 for details).

U - Setup Users
The selected user can access the 'Setup Users' option, allowing them to alter existing users or assign new users (see page 45 for details). However, users cannot assign User types to the system that have a higher access level than themselves. Also, if a user assigns a Custom User type, functions that are not available to them cannot be assigned to the Custom user.

E - Eng. Access
The selected user can access the 'Enable Engineer' option, allowing them to authorise Engineer access or Remote UDL access to the system (see page 33 for details).

A - Add Eng. Code (Engineers only)
Only Available to Engineers.

N - NVM Locking (Engineers only)
Only Available to Engineers.

User Name Text

Each user can be assigned up to 8 characters of name text. This can be beneficial when reading the log, as identification of people is made easier.

Text is programmed in a similar way to mobile phones. Characters are selected by pressing the corresponding key the appropriate number of times (to select a character on the same key, press ⇕ to move the cursor along).

Some control panels also features Predictive text. This can be used to make inserting words easier, i.e. when spelling the word COLIN, instead of typing 222666555444666, all that you need to do is type 26546 and the word is automatically selected.

NOTE

It is advised that predictive text be turned off when programming User name text as the library is not comprehensive enough to include all known names.

The library cannot be edited i.e. words cannot be added or changed.

The table below shows the keys to use and the characters that are assigned to them:

Key	Character															
0	_	0														
1	.	,	?	!	1	@	“	-	&	%	/	+	=	$	:	;
2	A	B	C	2	a	b	c									
3	D	E	F	3	d	e	f									
4	G	H	I	4	g	h	i									
5	J	K	L	5	j	k	l									
6	M	N	O	6	m	n	o									
7	P	Q	R	S	7	p	q	r	s							
8	T	U	V	8	t	u	V									
9	W	X	Y	Z	9	w	x	y	z							
⇕	Move Cursor															
✗/No	Backspace (delete)															
♫/Chime	Copy Text															
⌂/Part	Paste Text															
✉/Omit	Predictive Text															
✗/No	Upper/Lowercase, Predictive text and Clear Screen															

Programming Users

To Program Users, proceed as follows:

Enter a valid User code

(?)(?)(?)(?)

```
Do you want to
Arm System?
```

Press (Menu)/(Menu)

```
Do you want
User Menu?
```

Press (✓)/(Yes)

```
Do you want to
View Event Log?
```

Press (⇕) **until the display looks like this:**

```
Do you want to
Setup Users?
```

Press (✓)/(Yes)

```
Setup Users
User 02:
```

Select a user (?)(?) **or use the** (⇕) **key to search**

```
Setup Users
User 10:
```

To Program a Code

Press (✓)/(Yes)

```
Enter User Code>
      ------
```

Enter the new User code (?)(?)(?)(?)

(The code can be 4, 5 or 6-digits long)

Press (✓)/(Yes)

To Assign a TAG

Press (⌂)/(Area)

```
Add TAG To User?
1=New, 2=Import
```

Press (1), (2) or

(✗)/(No) to exit.

```
Present TAG NOW !
```

Present the TAG to The 'Prox' symbol on the keypad

(A confirmation tone will be heard)

See next page...

From Previous page...

```
User 10 areas >
  > A******* <
```

Use keys (1) - (8) to select/deselect areas then press (✓)/(Yes)

```
User 10 Type is>
Not in Use
```

Use keys (1) - (8) to select a User type or use the (⬍) key to search

(Refer to page 45 for a list of available User types)

```
User 10 Type is>
Standard
```

Press (✓)/(Yes)

These options are only displayed if a Custom User type is selected

Press (⬍) to scroll through options and press (✗)/(No) to select the option
('Letter' = option **IS** selected, 'Star' = option is **NOT** selected).

```
Armin9
>A D O * * * * F
```

Press (✓)/(Yes) when finished

```
User 10 Option 1
 A D O * * * * F
```

Press (✓)/(Yes) to select 'Options 2' and press (✗)/(No) to edit

```
Accces User Menu
>U * * * * * * O
```

Press (✓)/(Yes) when finished

```
User 10 Option 2
 U * * * * * * O
```

Press (✓)/(Yes) to select 'Config' and press (✗)/(No) to edit

(The following option is only displayed if 'User Menu' has been selected, see above)

```
Chan9e Own Code
>C Z * * * E * *
```

Press (✓)/(Yes) when finished

```
User 10 Confi9
 C Z * * * E * *
```

Press (✓)/(Yes)

```
User 10 Locked>
by timer ........
```

Use keys (1) - (8) to select a timer if required then press (✓)/(Yes)

```
User 10 Name is:
```

Press (✗)/(No) to edit the User name text, press (✓)/(Yes) when finished

(For details on programming text please refer to page 51). **Press (✓)/(Yes)**

This option is only displayed if a User with the 'Door Strike' attribute is selected

```
User 10 Door Ctl
  > ******** <
```

Use keys (1) - (8) to select/deselect doors then press (✓)/(Yes)

```
Add TAG To User?
1=New, 2=Import
```

Press (1) to assign TAG (2) to import or (✗)/(No) to ignore TAG programming

```
Present TAG NOW !
```

Present the TAG to the 'Prox' symbol on the keypad

(A confirmation tone will be heard)

Press (▤)/(Menu) when finished

Press (↺)/(Reset) to exit the menu

The display will return to normal.

Deleting Users

To delete User codes proceed as follows:

Ensure that Setup Users is selected, the display should look like this:

```
Setup Users
User 02:
```

Select a user (?) (?) then press (✓)/(Yes)

```
Enter User Code>
      ______
```

Press (↺)/(Reset)

```
Do you want to
DELETE User 02
```

Press (✓)/(Yes) to confirm deletion of the selected User code

Press (▤)/(Menu) when finished

Press (↺)/(Reset) to exit the menu

The display will return to normal.

Setting up the Part Arms

When a Part Arm 1, 2 or 3 is selected, pre-programmed zones are omitted to allow access to certain parts of the building. This option allows these zones to be programmed or altered by any User that has access to the 'Omit' menu.

To set up the Part Arms, proceed as follows:

Enter a valid User code

? ? ? ?, the display should look like this:

```
Do you want to
Arm System?
```

Press Menu

```
Do you want
User Menu?
```

Press Yes

```
Do you want to
View Event Log?
```

Press Part

```
Do you want to
Alter Part Arms?
```

Press Yes

```
Zone 001 Part...
Front Door
```

Press Omit to select Part Arm 1

Press Chime to select Part Arm 2

Press Part to select Part Arm 3

```
For Part Arm 1
Zone 001 is > ON
```

Enter a zone number ? ? ? or use the key to search

```
For Part Arm 2
Zone 001 is > ON
```

Press No to turn zone ON or OFF for the selected Part Arm

```
For Part Arm 2
Zone 010 is >OFF
```

Repeat for other zones

Press Menu when finished

Press Reset to exit the menu

The display will return to normal.

Calling a Remote PC

This option is used to initiate a call to a remote uploading and downloading computer.

To send a call to a Remote PC, proceed as follows:

Enter a valid User code ? ? ? ?

```
Do you want to
Arm System?
```

Press / Menu

```
Do you want
User Menu?
```

Press ✓ / Yes

```
Do you want to
View Event Log?
```

Press ⇕ until the display looks like this:

```
Do you want to
Call Remote PC?
```

Press ✓ / Yes

```
Call Back No.1:
01234567890
```

Use keys 1 - 3 to select a Call Back number

(i.e. 2 = Call Back number 2)

```
Call Back No.2:
01234567890
```

Press ✓ / Yes to start the call back

Press ↺ / Reset to exit the menu

The display will return to normal.

Altering the Holiday Dates

This option is used to alter the programmable Holiday Dates. These dates can be used to prevent the control timers from operating on certain dates of the year (bank holidays etc.) or to only operate on certain dates (reminders).

To alter Holiday Dates, proceed as follows:

Enter a valid User code ? ? ? ?

```
Do you want to
Arm System?
```

Press / Menu

```
Do you want
User Menu?
```

Press ✓ / Yes

```
Do you want to
View Event Log?
```

Press ⇕ until the display looks like this:

```
Do you want to
Alter Hol. Dates
```

Press ✓ / Yes

```
Holiday Date 1>
    00/00/00
```

Use ⇕ to Select a Holiday Date from 1 to 24

```
Holiday Date 3>
    00/00/00
```

Press ✗ / No then enter the new date D D M M Y Y

```
Holiday Date 3>
    24/12/02
```

Press ✓ / Yes to accept the new Holiday Date

Repeat for other holiday dates

Press / Menu when finished

Press ↺ / Reset to exit the menu

The display will return to normal.

Adjusting Speaker Volumes

This option is used to adjust the volume level of speakers that are connected to the control panel, keypads and expanders.

To adjust speaker volumes, proceed as follows:

Enter a valid User code

? ? ? ?

```
Do you want to
Arm System?
```

Press / Menu

```
Do you want
User Menu?
```

Press / Yes

```
Do you want to
View Event Log?
```

Press until the display looks like this:

```
Do you want to
Adjust Volumes?
```

Press / Yes

```
Panel Volume
   level = 6
```

Press to select a Panel, Keypad or Expander speaker

```
Keypad 03 Volume
   Level = 4
```

Press / No then 1 - 8 to enter a volume level

(1 = Minimum, 8 = Maximum)

Press / Chime to hear the new volume level

```
Keypad 03 Volume
   Level =>7
```

Press / Yes to accept the new speaker volume

Repeat for other speakers

Press / Menu when finished

Press / Reset to exit the menu

The display will return to normal.

Printing the Event Log

If a printer or terminal is connected to the control panel, this option can be used to print out events from the systems Event Log.

To print the Event Log, proceed as follows:

Enter a valid User code ? ? ? ?

```
Do you want to
Arm System?
```

Press / Menu

```
Do you want
User Menu?
```

Press ✓ / Yes

```
Do you want to
View Event Log?
```

Press ⬍ until the display looks like this:

```
Do you want to
Print Event Log?
```

Press ✓ / Yes

```
Number of events
     > 0050
```

Enter the number of required events ? ? ? ?

```
Number of events
     > 0500
```

Press ✓ / Yes to print the Event Log

Press ↺ / Reset to exit the menu

The display will return to normal.

Editing a Mobile Telephone Number

If the control panel has been programmed to send SMS text messages to a mobile phone in the event of an alarm occurring etc. this option allows the mobile telephone numbers to be programmed.

To edit a Phone Number, proceed as follows:

Enter a valid User code ? ? ? ?

```
Do you want to
Arm System?
```

Press / Menu

```
Do you want
User Menu?
```

Press / Yes

```
Do you want to
View Event Log?
```

Press until the display looks like this:

```
Do you want to
Edit Phone No.?
```

Press / Yes

```
Telephone No. 1>
 CAN NOT CHANGE
```

Press to select the required number

```
Telephone No. 3>
```

Press / No to edit the number

```
079890123456
            ^>123
```

Enter the required mobile phone number then press / Yes

```
Telephone No. 3>
079890123456
```

Press / Menu when finished

Press / Reset to exit the menu

The display will return to normal.

Changing Ricochet Device Batteries

If enabled the Master User at user 01 may access this option to replace batteries in Ricochet Wireless devices installed on the system. Only Areas with Ricochet Devices assigned to the Master User may be selected. The battery replacement option disables tampers on Ricochet devices for 60 minutes. All tampers will be recorded in the event log. If battery replacement mode is not stopped within the 60 minute time window, the tamper circuits will be re-enabled and cause an alarm condition.

This **WILL NOT** put any Ricochet sounders into hold off mode. To put any sounders on the system into hold off mode. See page 38

To replace batteries, proceed as follows:

Enter a valid Master User code

? ? ? ?

```
Do you want to
Arm System?
```

Press / Menu

```
Do you want
User Menu?
```

Press / Yes

```
Do you want to
View Event Log?
```

Press

```
Start Battery
Replacement?
```

Press / Yes

```
Select Areas >
A.......<.......
```

Use keys 1 - 8 to select or deselect an area to start battery replacement

```
Select Areas >
A.......<.......
```

Press / Yes and proceed to change device batteries

```
Start Battery
Replacement?
```

When complete Press

```
Stop Battery
Replacement?
```

Use keys 1 - 8 to select or deselect an area to stop battery replacement

```
Select Areas >
A.......<.......
```

Press / Yes when complete

Press / Menu, when finished

Press / Reset to exit the menu

The display will return to normal.

View Unique Id (GUiD)

GUID (or UUID) is an acronym for 'Globally Unique Identifier' (or 'Universally Unique Identifier'). This identifier is factory programmed and used as part of the *Texecom Connect* protocol. It cannot be altered and may be requested by Technical Support in certain circumstances when fault finding any issues related to *Texecom Connect*.

Enable Texecom Connect App

This menu is available to both the Master User and the Engineer and is used to generate a code to enable the Texecom Connect app. The menus is **ONLY** required for the initial setup of the app. You may be asked to utilise this menu if your system is being enabled for Texecom Connect. If a subsequent app code is generated the app may stop functioning.

Depending on the connection speed you may or may not see some or all of these screens. The App Code screen is the important one. The app code generated should be used immediately. If not used it will expire after one hour.

Keypad Screen	Explanation
Enable Texecom Connect App ?	Press Yes at this screen to initiate the process
Please Wait Modem is Online	Displayed if the communicator is already busy (online with some other ARC or in UDL). Stays on this screen until communicator is ready to do this setup call.
Incorrect Confi9 CALL Terminated	Check panel ARC configuration. This line is displayed if there is no ARC configured for Texecom Connect.
Initialisin9 Please Wait	Found an ARC to do the setup call. The setup call is being initialized.
Start Setup Call Sendin9 IP	Trying to connect to the server
Call in Pro9ress IP Connected	IP connection is established with the server
Call Initialized Usin9 ARC#	Sent all the required details to the server
Waitin9 For Acknowled9ment	Waiting for server to reply
Texecom Connect App Code: ######	Reply received successfully from server. Access code displayed.
Call Retryin9 NO CARRIER	This means the IP connection is not available for some reason (either the local IP network is down or the server is down etc.)
Ack Failed Call Terminated	Didn’t get the ACK or got incorrect ACK from server. Server didn’t reply for some reason.

Reset Recipe Data

This function is only applicable to systems that are enabled for use with the Texecom Connect app. Resetting recipe data will clear all recipes created with the Connect app that are stored in the panel.

To reset Recipe Data

Enter a valid Master User code ? ? ? ?

```
Do you want to
Arm System?
```

Press / Menu

```
Do you want
User Menu?
```

Press ✓ / Yes

```
Do you want to
View Event Log?
```

Use ⬍

```
Do you want to
Reset RecipeData
```

Press ✓ / Yes

```
Press YES Reset:
Recipe Data
```

Press ✓ / Yes

```
Recipe Data
* Please Wait! *
```

```
Press YES Reset:
Recipe Data
```

Press / Menu when finished

Press / Reset to exit the menu

5. Specifications

European Standards

Hereby, ***Texecom*** declares that ***Premier Elite*** alarm panels complies with the essential requirements of the following Directives:

- 2014/30/EU EMC Directive
- 2014/35/EU LVD Directive
- 2011/65/EU RoHS Directive

In relation to wireless products:

Hereby, ***Texecom*** declares that the radio equipment type : GEWA1000, GEA1000 (***Premier Elite*** xx-W) and GEXA1000 (***Premier Elite*** 64-W LIVE), is in compliance with Directive 2014/53/EU.

The full EU declaration of conformity is available here: http://www.texe.com/cert/doc/DEC-T00271-2.pdf

The product therefore meets all the requirements to enable it to be CE marked.

Weee Directive: 2012/19/EU (WEEE directive): Products marked with this symbol cannot be disposed of as unsorted municipal waste in the European Union. For proper recycling, return this product to your local supplier upon the purchase of equivalent new equipment, or dispose of it at designated collection points. For more information see: www.recyclethis.info.

Inhibit Functions

For Alarms and Tamper is controlled by the Swinger shutdown counter which is Engineer programmable and is defaulted to 3.

Minimum Logical Keys

10,000 for 4 digit code*

100,000 for 5 digit code*

1,000,000 for 6 digit code8

The number of disallowed codes = 0*

NOTE **Dependant on the use of the Black Listed codes function available via Wintex, a maximum of 16 codes may be Black Listed*

Warranty

All Texecom products are designed for reliable, trouble free operation. Quality is carefully monitored by extensive computerised testing. As a result the control panel is covered by a two-year warranty against defects in materials or workmanship.

As the control panel is not a complete alarm system but only a part thereof, Texecom cannot accept responsibility or liability for any damages whatsoever based on a claim that the control panel failed to function correctly.

Due to our policy of continuous improvements Texecom reserve the right to change specification without prior notice.

Premier Keypads and Expanders are protected by UK & International Registered Design. Registered Design Number: 2089016 and 3004996.

Premier & *Premier Elite* are trademarks of Texecom.

6. Installation Records

Areas

No.	Description	Exit Time	Entry Time 1	Entry Time 2	Bell Delay	Bell Duration	Abort Time
		Sec.	Sec.	Sec.	Min.	Min.	Sec.
		Sec.	Sec.	Sec.	Min.	Min.	Sec.
		Sec.	Sec.	Sec.	Min.	Min.	Sec.
		Sec.	Sec.	Sec.	Min.	Min.	Sec.
		Sec.	Sec.	Sec.	Min.	Min.	Sec.
		Sec.	Sec.	Sec.	Min.	Min.	Sec.
		Sec.	Sec.	Sec.	Min.	Min.	Sec.
		Sec.	Sec.	Sec.	Min.	Min.	Sec.
		Sec.	Sec.	Sec.	Min.	Min.	Sec.
		Sec.	Sec.	Sec.	Min.	Min.	Sec.
		Sec.	Sec.	Sec.	Min.	Min.	Sec.
		Sec.	Sec.	Sec.	Min.	Min.	Sec.
		Sec.	Sec.	Sec.	Min.	Min.	Sec.
		Sec.	Sec.	Sec.	Min.	Min.	Sec.
		Sec.	Sec.	Sec.	Min.	Min.	Sec.
		Sec.	Sec.	Sec.	Min.	Min.	Sec.

Keypads

RKP No.	Keypad Location	Keypad Area	Quick Arm	Emergency Keys		
				PA	Fire	Med

Zones

Zone No.	Zone Description	Zone Type	Zone Areas	Zone Omit	Part Arms		
					1	2	3
Tick Zones Included in Part Arms							

Zone No.	Zone Description	Zone Type	Zone Areas	Zone Omit	Part Arms		
					1	2	3
Tick Zones Included in Part Arms							

User Codes

User	Name	Type	Default	New Code	Area	Time Lock
01		Master	5678			
			N/A			
			N/A			
			N/A			
			N/A			
			N/A			
			N/A			
			N/A			
			N/A			
			N/A			
			N/A			
			N/A			
			N/A			
			N/A			
			N/A			
			N/A			
			N/A			
			N/A			
			N/A			
			N/A			
			N/A			
			N/A			
			N/A			
			N/A			
			N/A			
			N/A			
			N/A			
			N/A			
			N/A			
			N/A			
			N/A			
			N/A			
			N/A			
			N/A			
			N/A			
			N/A			
			N/A			
			N/A			
			N/A			
			N/A			
			N/A			
			N/A			

Installation Company Details

Installation Engineer: _____

Installation Company: _____

Address: _____

_____

_____

Telephone Number: _____

Installation Date: _____

Service Record

Date Serviced	Comments	Engineer

Emergency Telephone Numbers

For 24 Hour Call Out

For Anti-Code Reset

Control Panel

Details						
Model	*Elite 12* ☐	*Elite 24* ☐	*Elite 48* ☐	*Elite 88* ☐	*Elite 168* ☐	*Elite 640* ☐
Location						

© Texecom Limited 2017

INS177-9

Need a hand with your system?

If anything in this manual doesn't match your system, you've forgotten a code, or something isn't working as it should, just give us a call – we're always happy to help.

01892 341464 · 01892 654198

info@wealdensecurity.co.uk
www.wealdensecuritysystems.co.uk

We also offer

Annual servicing and maintenance
Repairs, upgrades and system takeovers
24/7 alarm monitoring with keyholder and fire brigade call-out
Free, no-obligation surveys and quotations